5.1 SCOPE.

5.1.1 Purpose. This section establishes and illustrates the methods of specifying dimensions and tolerances on drawings.

5.1.1.1 Inch Versus Metric: Method Of Comparison. This section presents the methods for specifying dimensioning and tolerances on engineering drawings for both the inch and metric systems. **Whenever the application is common to both systems, one (1) interpretation and/or illustration is given.** Where both systems are applied differently, a side by side interpretation and/or illustration is presented and identified. Linear unit callouts are expressed in inches and decimal parts of the inch, and metric callouts are expressed in millimeters and decimal factors (10 to the minus or 10^{-1}, 10^{-2}, 10^{-3}, etc., e.g. .1, .01, 001) of a millimeter unless otherwise specified.

5.1.1.2 Phasing Out ANSI Y14.5-1973 and ANSI Y14.5M-1982 To ASME Y14.5M-1994. Whenever ANSI Y14.5-1973 and ANSI Y14.5M-1982 differ from ASME Y14.5M-1994, a "WAS" and a "NOW" interpretation will be presented to assure that the older drawings, still in use, will be understood during the phasing out of the editions of ANSI Y14.5-1973 and ANSI Y14.5M-1982 to the ASME Y14.5M-1994 revised edition.

5.1.1.3 Use Of The Metric System. Unless otherwise specified by contract or purchase order, metric units of measure shall be used on engineering drawings in accordance with ASTM SI 10 (X-Ref: IEEE SI 10). Projects that are not government-related may use either system of units.

5.1.1.4 Metric Use Outlook. Metric unit usage shall be in accordance with the International System of Units (SI). It is expected that these metric units will one day replace the United States (U.S.) customary inch units.

5.1.1.5 ANSI Y14.5-1973, ANSI Y14.5M-1982 or ASME Y14.5M-1994 Recognition. Drawings based on ANSI Y14.5-1973, ANSI Y14.5M-1982 or ASME Y14.5M-1994 shall indicate this fact on the drawing in the General Notes Column. The date (year) shall be included in the callout as indicated in the previous sentence.

5.1.1.6 Explanatory Notes Treatment. Notes that appear on sample drawings, figures, tables, etc. in this manual in capital letters are part of the sample document. Notes that appear in lower case letters, italics or similar treatments are intended to be explanatory and are not a part of the sample document.

5.1.1.7 Previous Interpretations Prior to ASME Y14.5M-1994. The evolution of dimensioning and tolerancing is provided in APPENDIX A of this section in the form of a matrix to identify in what period of time the drawing was originally prepared for proper interpretation and revision requirements.

5.1.2 New Design (Hard Conversion) As Opposed to Changing Existing Inch-Pound Measurement Units to Equivalent Metric Units (Soft Conversion). The meaning of “Hard Conversion” versus “Soft Conversion” is described as follows:

a. “Hard Conversion” is the general term used when a new item is designed in whole metric dimensions i.e.: 15 mm, 15.5 mm, etc.; without future concern to convert to inch-pounds units. The term “hard conversion” is technically incorrect because no conversion takes place nor is intended. Thus it is a new item requiring new item identification.

b. “Soft Conversion” is the process of converting inch-pound measurement units to equivalent metric units within the acceptable measurement tolerances, i.e. .250 [6.35], without changing the physical configuration; thus, it is the same both before and after the conversion. Note: Rounding is inevitable with this practice, thus it must be done very carefully.

5.1.3 Technical Documentation. Technical documentation shall comply with the following:

5.1.3.1 Engineering Drawings.

a. **New Design**. Unless otherwise specified, values shall be expressed in metric units. The metric system or the US Customary (Inch) system may be used for purely commercial applications.

b. **Existing Design (including control drawings).** Values shall be expressed in the unit system in which the item or items were designed.

c. **Modified Design.** On new drawings prepared to describe modifications to existing inch-pound designs, values describing the modified portion shall be expressed in the measurement units used in designing the modified portion. When metric conversion of any part of the design is required, applicable values shall be expressed in metric units.

d. **Dual Dimensioning.** Dual Dimensioning shall not be used on defense-related or government applications, except in cases where dual dimensioned drawings exist prior to the issue of MIL-STD-100C that are otherwise acceptable, or where explicitly allowed or requested by the governing activity. Purely commercial applications may use dual dimensioning if desired. Where dual dimensioning is used, the primary unit shall be shown as a dimension value followed by the alternate unit shown in brackets or parentheses indicating it is a reference value. The primary unit is placed above the alternate unit for dual dimensions shown using a vertical format; the primary unit is placed after the alternate unit for dual dimensions shown using a horizontal format. See PARAGRAPH 5.4.2.

e. **Dimensioning and Tolerancing.** Dimensioning and tolerancing shall be in accordance with ASME Y14.5M with the appropriate date of issue applied (i.e. ASME Y14.5M-1994).

5.1.3.2 Specifications. Specifications prepared shall use the terminology of the unit system in which the item is to be designed.

5.1.3.3 Other Technical Data. Technical manuals, test reports, and other technical data shall use the terminology of the unit system in which the item is designed.

5.1.3.4 Interface Devices. Interface features of devices that interface between inch-pound and metric items shall be specified in the system applicable to the item with which it mates.

5.1.3.5 Inch-Pound and Metric Equivalents. Unless otherwise specified, the use of both inch-pound and metric equivalents is optional, except as required by PARAGRAPHS 5.1.3.2, 5.1.3.3 and 5.1.3.4. When equivalents are included, they shall be identified as follows:

a. **Dual Indication.** On designs based on the US Customary system, the inch-pound value shall be stated first followed by the metric value in brackets “[ ]”. See SECTION M4, FIGURE M4-3. On designs based on the metric system, the metric value shall be stated first followed by the inch-pound value in brackets “[ ]”.

b. **Tabular Form.** Unless otherwise specified, table(s) may be included directly on the drawing or document. It shall translate all required values from one system of units to the other in ascending or descending order. See SECTION M4, FIGURE M4-3a.

5.1.3.6 Metric Identifier. A metric identifier, that is the word “METRIC”, preferably enclosed in a rectangle, shall be placed on the field of the drawing near the Title block on the first sheet. On other technical data, it shall be located in the vicinity of the document number. Lettering size shall be approximately the same as the drawing or document number. See SECTION M4, FIGURE M4-2.

5-2 APPLICABLE DOCUMENTS. Note: DoD Policy Memo 05-3 “Elimination of Waivers to Cite Military Specifications and Standards in Solicitation and Contracts” has eliminated the need for waivers to use MIL-SPECS and MIL-STDS on DoD contracts. (See PREFACE 1, Section 2)

MIL-STD-100	Engineering Drawing Practice (CNCLD Supsd by: ASME Y14.100 & Appendices, ASME Y14.24, Y14.34M & Y14.35M)
ASME B4.1	Preferred Limits and Fits for Cylindrical Parts (inch)
ASME B4.2	Preferred Metric Limits and Fits
ASME B4.3	General Tolerances for Metric Dimensioned Products
ASME B5.10	American Standard Self-Holding and Steep Taper Series
ASME B94.6	Knurling
ASME Y14.2M	Line Convention and Lettering
ANSI Y14.5-1973	Dimensioning and Tolerancing (Inch)
ANSI Y14.5M-1982	Dimensioning and Tolerancing (Metric)
ASME Y14.5M-1994	Dimensioning and Tolerancing (Metric)
ASME Y14.100	Engineering Drawing Practice
ASTM SI 10	Standard for Use of the International System of Units (SI) (X-Ref: IEEE SI 10)
ISO 1000	SI Units and Recommendations for the Use of Their Multiples and of Certain Other Units
ISO 2768-1	General Tolerances, Tolerance for Linear and Angular Dimensions Without Individual Tolerance Indications
ISO 2768-2	General Tolerances, Geometrical Tolerances for Features Without Individual Tolerance Indications

5.3 DEFINITIONS. (Key Words Alphabetically Listed)

5.3.1 Actual Mating Envelope, External. A similar perfect feature representing a feature of size that contacts the high points of the feature of size. For example, a smallest circumscribed cylinder for a cylindrical shape or minimum separation of two parallel planes about a rectangular shape.

ACTUAL MATING ENVELOPE of the pin

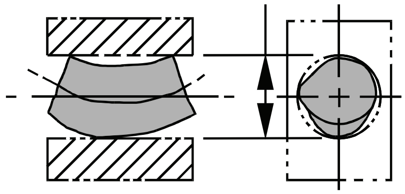

5.3.2 Actual Mating Envelope, Internal. A similar perfect feature representing a feature of size that contacts the high points of the feature of size. For example, a largest inscribed cylinder for a cylindrical shape or maximum separation of two parallel planes within a rectangular shape.

5.3.3 Allowance 1: An allowed dimensional difference between mating features of size. 2: An intentional difference in size between two mating features of size, allowing clearance for sliding fits. 3: The difference between the maximum material condition of mating features of size. 4: The minimum clearance (positive allowance) or maximum interference (negative allowance) between such features.

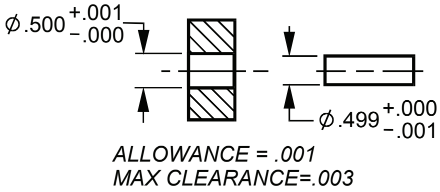

5.3.4 Angle, 90°. 1: A 90° angle applies where center lines and lines depicting features are shown at right angles on the drawing and no angle is specified. 2: The tolerance on these implied angles are controlled by the tolerance in the title block for angles. This also applies to 0°, 90°, 180°, 270°, 360°, etc. angles

5.3.5 Angle, BASIC 90° A 90° BASIC angle applies where center lines of feature in a pattern (0°, 90°, 180°, 270°, 360°, etc.) or surfaces shown at right angles on a drawing are located or defined by BASIC dimensions and no angle is specified, such as when dimensioning a rectangle with BASIC side dimensions and a PROFILE tolerance. The tolerance zones will be in a feature control frame.

5.3.6 Axis of Feature. A straight line that coincides with the axis of the actual mating envelope fit the specified feature. It may be simulated by the axis of a cylinder in the processing equipment (gage pin, gage hole, collet, chuck, mandrel, etc.).

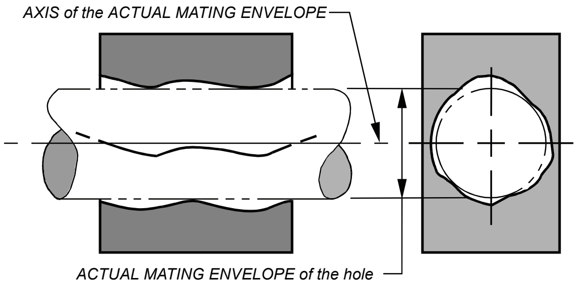

5.3.7 Boundary. INNER: A worst case boundary (that is, locus) generated by the smallest feature (smallest hole or pin) minus the stated geometric tolerance and any additional geometric tolerance (if applicable) from the feature's departure from its specified material condition. If Ⓜ is specified for a hole, this would be the same size as virtual condition. If Ⓛ is specified for a pin, this would be the same size as virtual condition.

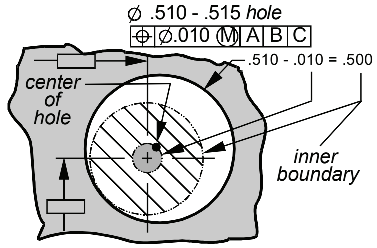

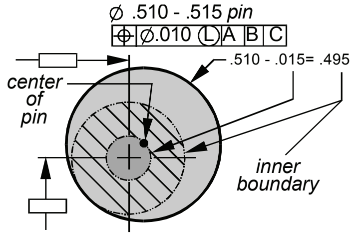

OUTER: A worst case boundary (that is, locus) generated by the largest feature (largest hole or pin) plus the stated geometric tolerance and any additional geometric tolerance (if applicable) from the feature's departure from its specified material condition. If Ⓜ is specified for a hole, this would be the same size as the worst-case resultant condition. If Ⓜ is specified for a pin, this would be the same size as virtual condition.

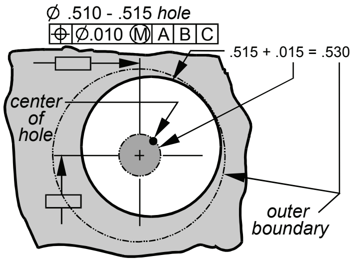

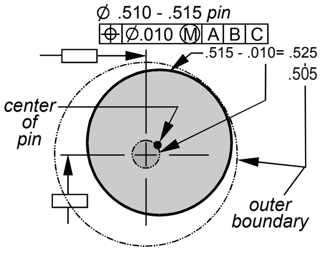

5.3.8 Boundary, Least Material Condition. Largest internal feature (hole), smallest external feature (pin).

5.3.9 Boundary, Maximum Material Condition. Smallest internal feature (hole), largest external feature (pin).

5.3.10 Center Plane of Feature. 1: The center of a non-cylindrical feature. 2: All the rules that apply to centerlines also apply to center planes. 3: A plane that coincides with the center plane of the actual mating envelope fit to the specified feature.

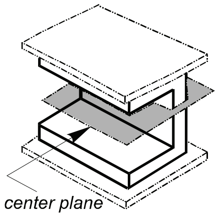

5.3.11 Coaxiality. 1: Having a common axis. 2: The condition where the axes of two or more surfaces of revolution are coincident. The amount of permissible variation from coaxiality may be expressed by position, runout or concentricity tolerance. Selection of the proper control depends on the nature of the functional requirements of the design as follows:

a. **Positional Tolerance Control.** Where surfaces of revolution are cylindrical and controlling the relationship of the axes is functional, positional tolerancing is recommended. Also, positional tolerancing may be applied on a material condition basis, which may allow additional tolerance.

b. **Runout Tolerance Control.** Where a combination of surfaces of revolution is cylindrical, conical or spherical relative to a common datum axis, a runout tolerance is recommended. See PARAGRAPH 5.14.9.1 Runout tolerances may not be specified at MMC because the runout tolerances control elements of the surface.

c. **Concentricity Tolerance Control.** Where it is desirable to control the median points of all diametrically opposed elements of a surface of revolution to a datum axis or center point, a concentricity tolerance may be used. In most cases position or runout tolerances should be considered before using concentricity.

5.3.12 Datum. Used as a basis for calculating or measuring. Datums are theoretically exact points, axes, and planes, derived from the true geometric counterpart of a specified datum feature. A datum is the origin from which the location or geometric characteristics of features of a part are established. They are elements of three mutually perpendicular intersecting planes known as a DATUM REFERENCE FRAME. Datums are simulated by associated processing equipment, such as machine tables, surface plates, right angle knees (plates), collets, pins, etc. or can be simulated by a Coordinate Measuring Machine (CMM). NOTE: Manufacturing need not use the datums stated on the drawing as long as the parts meet the drawing requirements when inspection measures the part in accordance with the drawing. The drawing must use datums to show the design requirements (also ISO 9001 requirements); engineering should not move the datums to represent the manufacturing setup. Keep in mind, engineering drawings are legal documents to identify the design requirements in case of litigation.

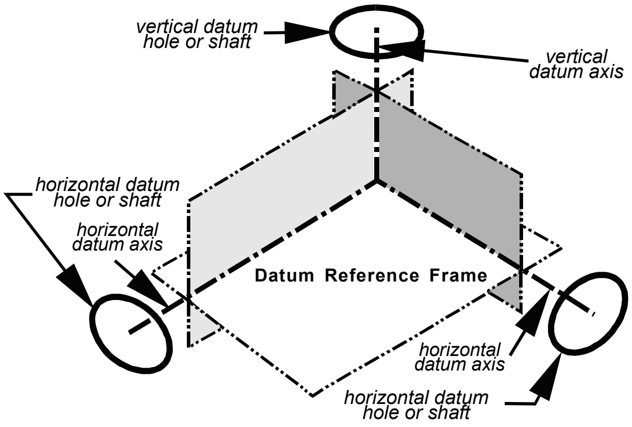

5.3.12.1 Datum Axis. Datums are assumed to exist in the simulated datums obtained from datum feature simulators. A datum axis may be obtained from a gage pin, a ring gage, a mandrel or similar tooling. Though these are not true cylinders, they are of such quality that their axes are used as the origin for measurements. ACTUAL MATING ENVELOPES, TRUE GEOMETRIC COUNTERPARTS, and VIRTUAL CONDITION BOUNDARIES are used to obtain a datum from a datum feature. A datum feature symbol may not be used to identify a centerline as a datum axis; the symbol is attached or directed to datum feature. A single datum axis may be established by two coaxial diameters by specifying both datum features with a single letter or by specifying each datum feature with a different and referencing them in a feature control frame, specifying both letters with a dash between them. The datum axis is simulated by simultaneously contacting the high points of both surfaces with two coaxial simulated cylinders or can be simulated by a (CMM).

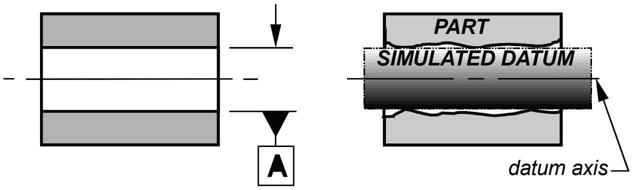

5.3.12.2 Datum Target. A specified point, line, or area on a part which is used to establish a datum.

5.3.12.3 Datum Feature Simulator. Inspection or processing equipment such as a surface plate, a gage surface, or a mandrel of adequately precise form contacting the datum feature(s) of a part being inspected.

5.3.13 Dimension. A numerical value expressed in appropriate units of measure and indicated on a drawing, along with lines, symbols and notes, to define a geometrical characteristic of an object.

5.3.13.1 Dimension; Basic Dimension. A numerical value used to describe the theoretically exact size, shape and datum target or the location of a tolerance zone for a feature stated in a feature control frame. It is the basis from which permissible variations are established by tolerances on other dimensions, in notes or by feature control symbols. Basic dimensions are shown on the drawing enclosed in a rectangle.

e.g.

NOW	**WAS**
$\boxed{\text{X.XXX}}$	BASIC or BSC

5.3.13.2 Dimension; Locating Dimension. A dimension that specifies a position or distance of one feature of an object with respect to another or to a datum reference frame.

5.3.13.3 Dimension, Single-Limit (Maximum). A dimension that controls the maximum limit only, the minimum limit is controlled by other elements of design.

5.3.13.4 Dimension, Single-Limit (Minimum). A dimension that controls the minimum limit only, the maximum limit is controlled by other elements of design.

5.3.13.5 Dimension; Reference Dimension. A dimension that has been specified elsewhere on the same drawing or on another drawing or document for a part or assembly referenced on the drawing. These reference callouts state the nominal dimensions, normally without tolerance, or both limits of a limit dimension. The method for indicating reference dimensions on drawings is to enclose the dimensions with parentheses, e.g. (.250). Note: Any callout that is not a dimension enclosed within parentheses is not a reference dimension; parentheses only designate dimensions as reference. A reference dimension shall not be used for manufacturing or inspection purposes. See Figure 5-13.

5.3.13.6 Dimension; Size Dimension. The specified value expressed in units of measure to define a size (diameter, length, width, etc.)

5.3.14 Eccentricity. The general term used to define the radial distance from the “center: of one feature to the “center” of another. (Note: This term is not defined in ASME Y14.5M-1994, so it has no precisely defined use in a dimensioning and tolerancing context. “Eccentric” and “eccentricity” are commonly used words in the English language, however, thus they are familiar to most English speakers. This highlights one of the dangers and potential pitfalls of using commonly understood words in a discipline like dimensioning and tolerancing where a very specialized vocabulary of specific jargon exists.)

5.3.15 Feature. A feature is a physical surface of a part. A feature may be used to establish a datum, such as a surface, pin, tab, hole, thread or slot. An individual feature may be:

a. A plane surface (or planar surface). (Note: a planar surface does not have size.)

b. Feature of Size: A single cylindrical or spherical surface, or a set of two opposed elements, or opposed parallel plane surfaces (all of which are associated with a size dimension and tolerance).

c. More complex surfaces, including a bounded feature (such as a complex linear extrusion), a cone, a wedge, a torus, a complex shape (such as the surface of an airfoil, the surface of an automobile fender, or any complex surface), etc.

5.3.16 Fit. A general term used to signify the range of interference to clearance resulting from the application of tolerances in the design of mating parts. Fits for cylindrical parts should be established using the preferred limits specified in ASME B4.1. Fit dimensional limits shall be specified on the drawing and not called out by the fit designation such as RC1, LC5, etc. However, metric fits may specify fit designation such as H7, 6g, etc.

5.3.16.1 Fit; Clearance Fit. One having limits so designed that a clearance always results when the mating parts are assembled.

5.3.16.2 Fit; Interference Fit. One having limits so designed that an interference always results when mating parts are assembled.

5.3.16.3 Fit; Line Fit. One having limits so designed that surface contact or clearance may result when mating parts are assembled.

5.3.16.4 Fit; Transition Fit. One having limits so designed that either a clearance or an interference may result when mating parts are assembled.

5.3.17 Full Indicator Movement (FIM). The total movement of the indicator when applied to a surface in an appropriate manner. Full Indicator Reading (FIR) and Total Indicator Reading (TIR) were formerly used. FIM is typically used with Circular Runout and Total Runout tolerances.

5.3.18 Geometric Tolerances. The general term applied to the category of tolerances used to control form, profile, orientation, location, and runout.

5.3.19 Dimensional Limits. Maximum and minimum values prescribed for specific dimensions. See FIGURE 5-2.

5.3.19.1 Dimensional Limits Are Absolute. All limits defined by dimensions and tolerances are considered as absolute limits. Dimensional limits, regardless of the number of decimal places, are to be used as if they were continued with zeros. See FIGURE 5-1. This applies to limits defined by directly toleranced dimensions (limit dimensions and dimensions with +/- tolerances), and to limits defined by basic dimensions and / or directly toleranced dimensions and applicable geometric tolerances. "Absolute limits" means there shall be no rounding down to obtain the upper limit and no rounding up to obtain the lower limit. This is extremely important from a Tolerance Analysis, fit, and interchangeability point of view.

5.3.19.2 Measured Values Must Conform With The Limits. For purposes of determining conformance with limits, the measured value is to be compared directly with the specified value; any deviation, however small, outside of the specified limiting values signifies non-conformance with the limits.

INCH			METRIC		
ANSI Y14.5-1973			ASME Y14.5M -1994 & ANSI Y14.5M - 1982		
1.25 *(± .03)*	Means	1.280--0 1.220--0	31.8 *(± 0.8)*	Means	32.60--0 31.0--0
1.250 *(± .010)*	Means	1.260--0 1.240--0	31.75 *(± 0.25)*	Means	32.00--0 31.50--0
1.252 1.250	Means	1.2520--0 1.2500--0	31.80 31.75	Means	32.80--0 31.75--0

**(±.XXX) = GENERAL DRAWING TOLERANCE*

<u>INTERPRETATION OF LIMITS</u>

FIGURE 5-1

5.3.20 Material Condition; Maximum (MMC or Ⓜ). The condition whereby the feature of size contains the maximum amount of material, e.g., minimum hole diameter and maximum shaft diameter.

5.3.21 Material Condition; Least (LMC or Ⓛ). The condition whereby the feature of size contains the least (minimum) amount of material, e.g., maximum hole diameter and minimum shaft diameter.

5.3.22 Size. A general term used to describe the magnitude of an internal or external feature or feature of size.

5.3.22.1 Size; Actual Size The size of an as-produced feature, including actual mating size and actual local sizes.

5.3.22.2 Size, Actual Local. The value of any individual distance at any cross section of a feature

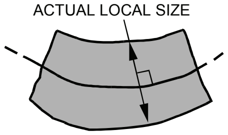

5.3.22.3 Size, Actual Mating. The dimensional value of the actual mating envelope.

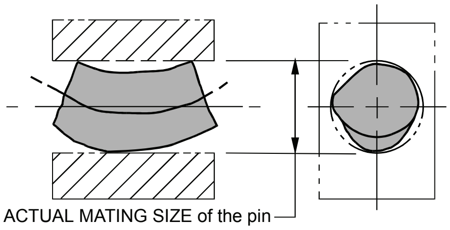

5.3.22.4 Size; Basic Size. The exact theoretical size or shape simulated as a hard object to gage maker's tolerance or a computer generated template. The basic size or shape may be drawn on the drawing with phantom lines.

5.3.22.5 Size, Feature Of. One cylindrical or spherical surface, or a set of two opposed parallel planar surfaces, each of which is associated with a directly toleranced dimension (size dimension).

5.3.22.6 Size; Limits Of Size. The specified maximum and minimum sizes.

5.3.22.7 Size; Mean Size. The size midway between the limits of size.

5.3.22.8 Size; Nominal Size. The designation used for the purpose of general identification. For example, a screw thread may be referred to as .250 diameter although the actual dimension on the drawing is .249 diameter. In this case, the .250 diameter is the nominal size.

5.3.22.9 Size; Regardless Of Feature (RFS or Ⓢ). The term used to indicate that a geometric tolerance or datum feature reference in a feature control frame applies at any increment of feature size within its size tolerance. Where RFS applies to a geometric tolerance value, it means that the geometric tolerance value is fixed at the specified value and is not related to the size of the as-produced feature. Where RFS applies to a datum feature reference in a feature control frame, it means that the datum feature simulator must expand or contract until it contacts the datum feature, thereby eliminating any possible datum feature shift for that datum feature. The symbol Ⓢ is no longer used or required, because it is now the default where ASME Y14.5M-1994 is invoked on the drawing. However, the 1994 standard permits using the symbol with positional tolerances as an optional practice (Rule #2a).

5.3.22.10 Size, Resultant Condition. The actual value of the resultant condition boundary.

5.3.22.11 Size, Virtual Condition. The actual value of the virtual condition boundary.

5.3.22.12 Size, Using Virtual and Resultant Condition. The formulas that follow may be used to calculate minimum / maximum gap between a mating hole and pin. Note: The formulas are based on the assumption that the parts and the datum reference frames for the mating features are coordinated, and that there is no additional relative movement or variation between the parts. If the parts are allowed to move relative to one another, it may be possible for the pin to touch the hole tangentially in some cases.

$\phi .114^{+.020}_{-.000}$ *hole*

⌖ | ⌀.010 Ⓜ

A	B	C	D
hole size	tol. size	VC size	RC size
.114	.010	.104	.124
.115	.011	.104	.126
.116	.012	.104	.128
.117	.013	.104	.130
.118	.014	.104	.132
.119	.015	.104	.134
.120	.016	.104	.136
.125	.021	.104	.146
.130	.026	.104	.156
.134	.030	.104	.164

← R_1 *(Resultant Condition for the largest hole)*

$\phi .046^{+.000}_{-.010}$ *pin*

⌖ | ⌀.005 Ⓜ

E	F	G	H
pin size	tol. size	VC size	RC size
.046	.005	.051	.041
.045	.006	.051	.039
.044	.007	.051	.037
.043	.008	.051	.035
.042	.009	.051	.033
.041	.010	.051	.031
.040	.011	.051	.029
.039	.012	.051	.027
.038	.013	.051	.025
.037	.014	.051	.023
.036	.015	.051	.021

← R_2

(Resultant Condition for the smallest pin)

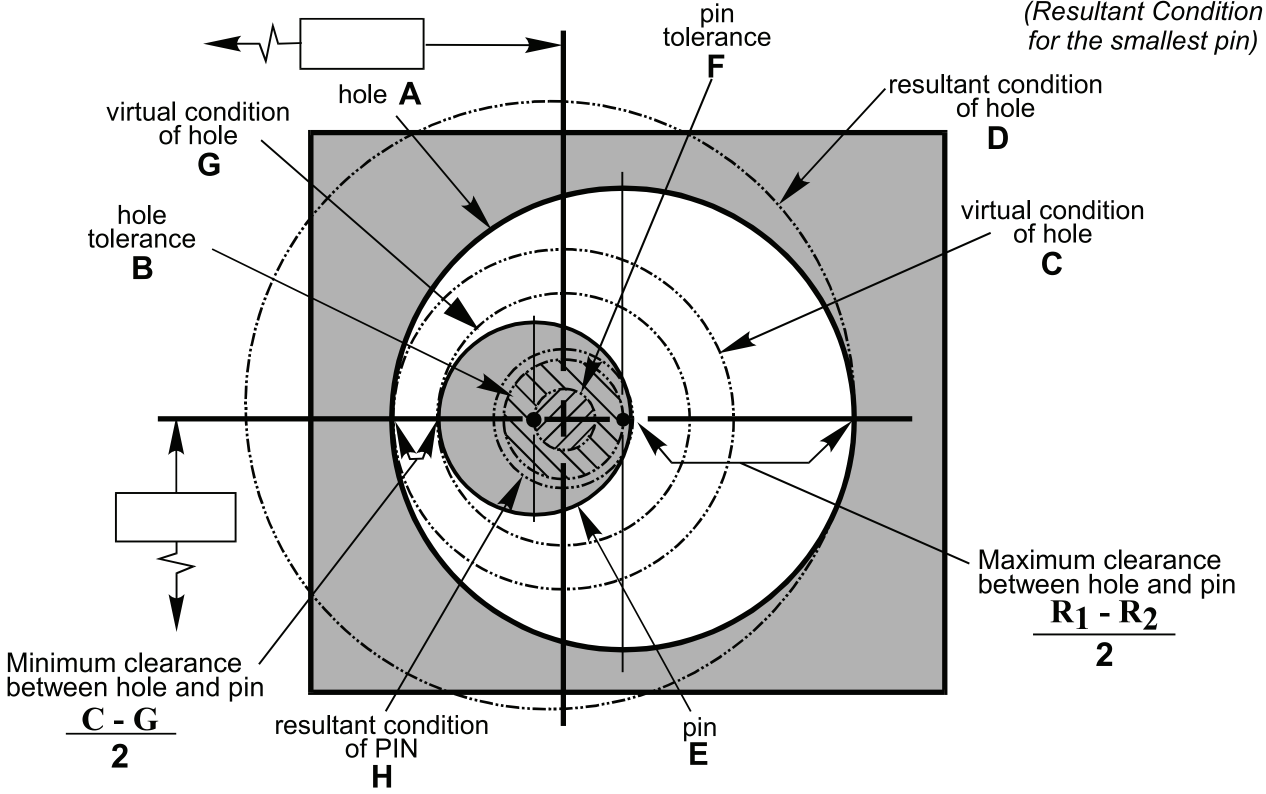

$$\frac{R_1 - R_2}{2}$$

$$\frac{C - G}{2}$$

5.3.23 Taper, Conical. A conical taper is the ratio of the difference in the diameter of two sections (perpendicular to the axis) of a cone to the distance between these sections. See PARAGRAPH 5.6.9

e.g.: Taper = $\frac{D - d}{L}$

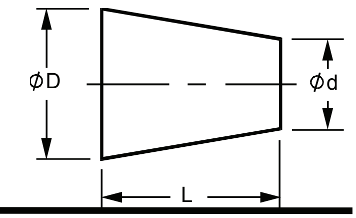

5.3.24 Taper, Flat. A flat taper is the ratio of the difference in heights at each end (above and at right angles to a base line) to the distance between those heights. The flat taper may also be specified by a toleranced slope and a toleranced height at one end. See PARAGRAPH 5.6.10.

e.g.: $\text{Slope} = \frac{H - h}{L}$

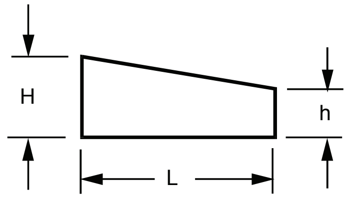

5.3.25 Tolerance. The total permissible variation between maximum and minimum limits of size, form, orientation, or location.

5.3.25.1 Tolerance, Bilateral. A tolerance in which variation is permitted in both directions from the specified dimension. See FIGURE 5-2.

5.3.25.2 Tolerance; Geometric. The general term applied to the category of tolerances used to control form, profile, orientation, location, and runout.

5.3.25.3 Tolerance, Unilateral. A tolerance in which variation is permitted in only one direction from the specified dimension. See FIGURE 5-2.

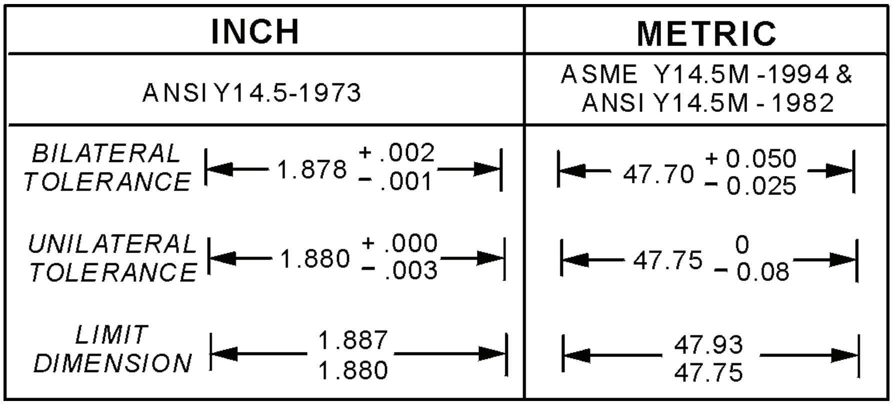

	INCH	METRIC
	ANSI Y14.5-1973	ASME Y14.5M-1994 & ANSI Y14.5M-1982
BILATERAL TOLERANCE	$1.878^{+.002}_{-.001}$	$47.70^{+0.050}_{-0.025}$
UNILATERAL TOLERANCE	$1.880^{+.000}_{-.003}$	$47.75^{\ 0}_{-0.08}$
LIMIT DIMENSION	1.887 1.880	47.93 47.75

THE APPLICATION OF TOLERANCES

FIGURE 5-2

5.3.26 True Position. The theoretically exact location of a feature established by basic dimensions. Typically, True Position establishes the center of the tolerance zone stated in a feature control frame.

5.3.27 Virtual/Resultant Condition. Depending upon its function, a feature of size may be controlled by size and applicable geometric tolerances. Material condition (MMC or LMC) may also be applicable. Consideration must be given to the collective effect of MMC in determining the clearance between parts (fixed or floating fastener formula) and in establishing gage feature sizes. Consideration must be given to the collective effect of LMC in determining guaranteed area of contact, thin wall conservation, and alignment hole location in establishing gage feature sizes.

a. **Virtual Condition.** A constant boundary generated by the collective effects of the specified material condition for a feature of size and the geometric tolerance that applies at that material condition. See FIGURES 5-3 thru 5-6.

   (1) **Size, Virtual Condition.** The actual value of the virtual condition boundary. See FIGURES 5-3 thru 5-6.

5.3.27 (Continued)

b. **Resultant Condition.** The variable boundary generated by the collective effects of a size feature's specified material condition, the geometric tolerance for that material condition, the size tolerance, and the additional geometric tolerance derived from the feature's departure from its specified material condition. See FIGURES 5-3 thru 5-6.

(1) **Size, Resultant Condition.** The actual value of the resultant condition boundary. See FIGURES 5-3 thru 5-6.

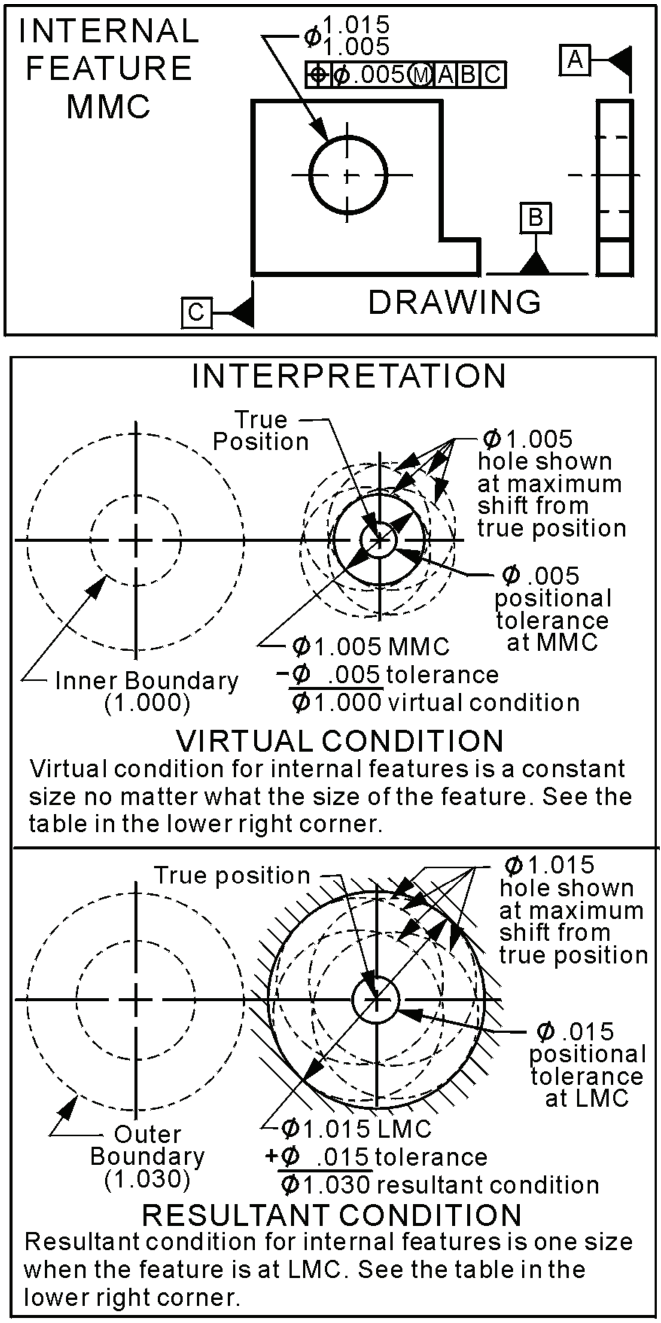

VIRTUAL CONDITION

Virtual condition for internal features is a constant size no matter what the size of the feature. See the table in the lower right corner.

RESULTANT CONDITION

Resultant condition for internal features is one size when the feature is at LMC. See the table in the lower right corner.

INCH	METRIC
.005	0.13
.006	0.15
.007	0.18
.008	0.20
.009	0.23
.010	0.25
.011	0.28
.012	0.30
.013	0.33
.014	0.36
.015	0.38
1.000	25.40
1.005	25.53
1.006	25.55
1.007	25.58
1.008	25.60
1.009	25.63
1.010	25.65
1.011	25.68
1.012	25.70
1.013	25.73
1.014	25.76
1.015	25.78
1.030	26.16

HOLE SIZE	POS. TOL.	VIRT. COND.	RESUL. COND.
1.005	.005	1.000	
1.006	.006		
1.007	.007		
1.008	.008		
1.009	.009		
1.010	.010		
1.011	.011		
1.012	.012		
1.013	.013		
1.014	.014		
1.015	.015		1.030

Worst-Case Resultant Condition

INTERNAL FEATURE
MMC CONCEPT-VIRTUAL AND RESULTANT CONDITION BOUNDARIES
FIGURE 5-3

5.3.27 (Continued)

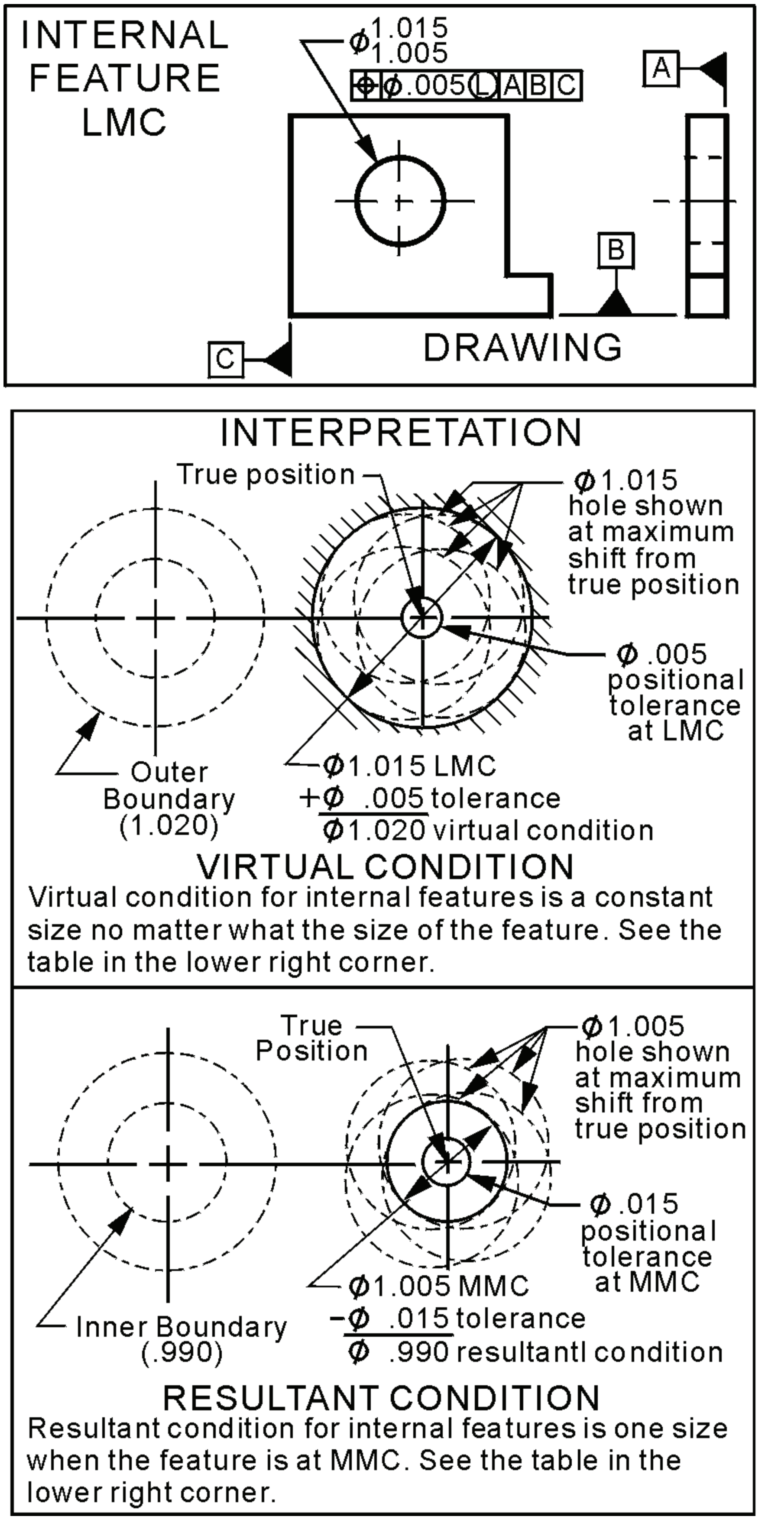

Virtual condition for internal features is a constant size no matter what the size of the feature. See the table in the lower right corner.

Resultant condition for internal features is one size when the feature is at MMC. See the table in the lower right corner.

INCH	METRIC
.005	0.13
.006	0.15
.007	0.18
.008	0.20
.009	0.23
.010	0.25
.011	0.28
.012	0.30
.013	0.33
.014	0.36
.015	0.38
.990	25.15
1.005	25.53
1.006	25.55
1.007	25.58
1.008	25.60
1.009	25.63
1.010	25.65
1.011	25.68
1.012	25.70
1.013	25.73
1.014	25.76
1.015	25.78
1.020	25.91

HOLE SIZE	POS. TOL.	VIRT. COND.	RESUL. COND.
1.015	.005	1.020	
1.014	.006		
1.013	.007		
1.012	.008		
1.011	.009		
1.010	.010		
1.009	.011		
1.008	.012		
1.007	.013		
1.006	.014		
1.005	.015		.990

Worst-Case Resultant Condition

INTERNAL FEATURE

LMC CONCEPT-VIRTUAL AND RESULTANT CONDITION BOUNDARIES

FIGURE 5-4

5.3.27 (Continued)

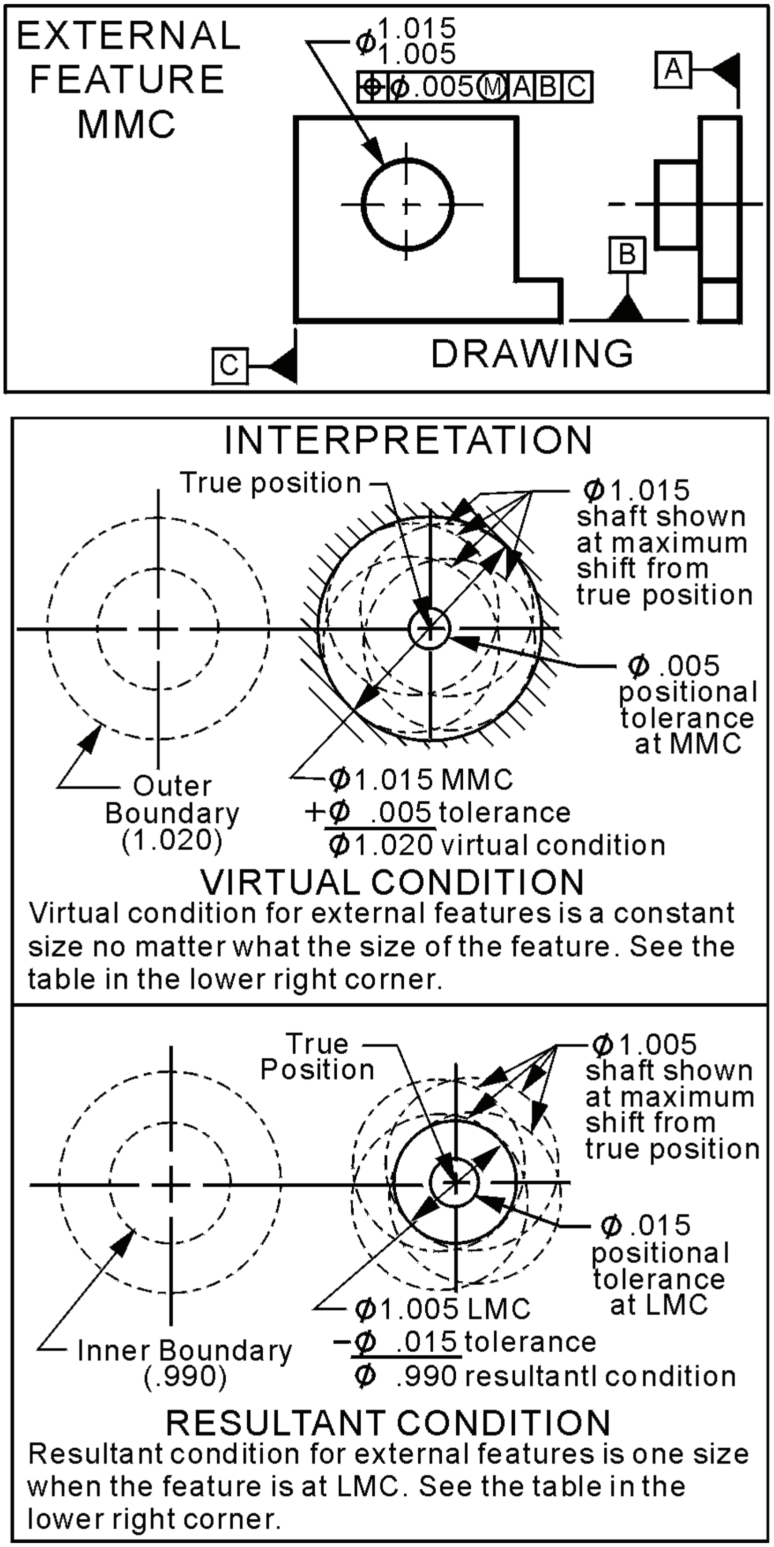

Virtual condition for external features is a constant size no matter what the size of the feature. See the table in the lower right corner.

Resultant condition for external features is one size when the feature is at LMC. See the table in the lower right corner.

INCH	METRIC
.005	0.13
.006	0.15
.007	0.18
.008	0.20
.009	0.23
.010	0.25
.011	0.28
.012	0.30
.013	0.33
.014	0.36
.015	0.38
.990	25.15
1.005	25.53
1.006	25.55
1.007	25.58
1.008	25.60
1.009	25.63
1.010	25.65
1.011	25.68
1.012	25.70
1.013	25.73
1.014	25.76
1.015	25.78
1.020	25.91

SHAFT SIZE	POS. TOL.	VIRT. COND.	RESUL. COND.
1.015	.005	↑	
1.014	.006		
1.013	.007		
1.012	.008		
1.011	.009		
1.010	.010	1.020	
1.009	.011		
1.008	.012		
1.007	.013		
1.006	.014		
1.005	.015	↓	.990

Worst-Case Resultant Condition

EXTERNAL FEATURE

MMC CONCEPT-VIRTUAL AND RESULTANT CONDITION BOUNDARIES

FIGURE 5-5

5.3.27 (Continued)

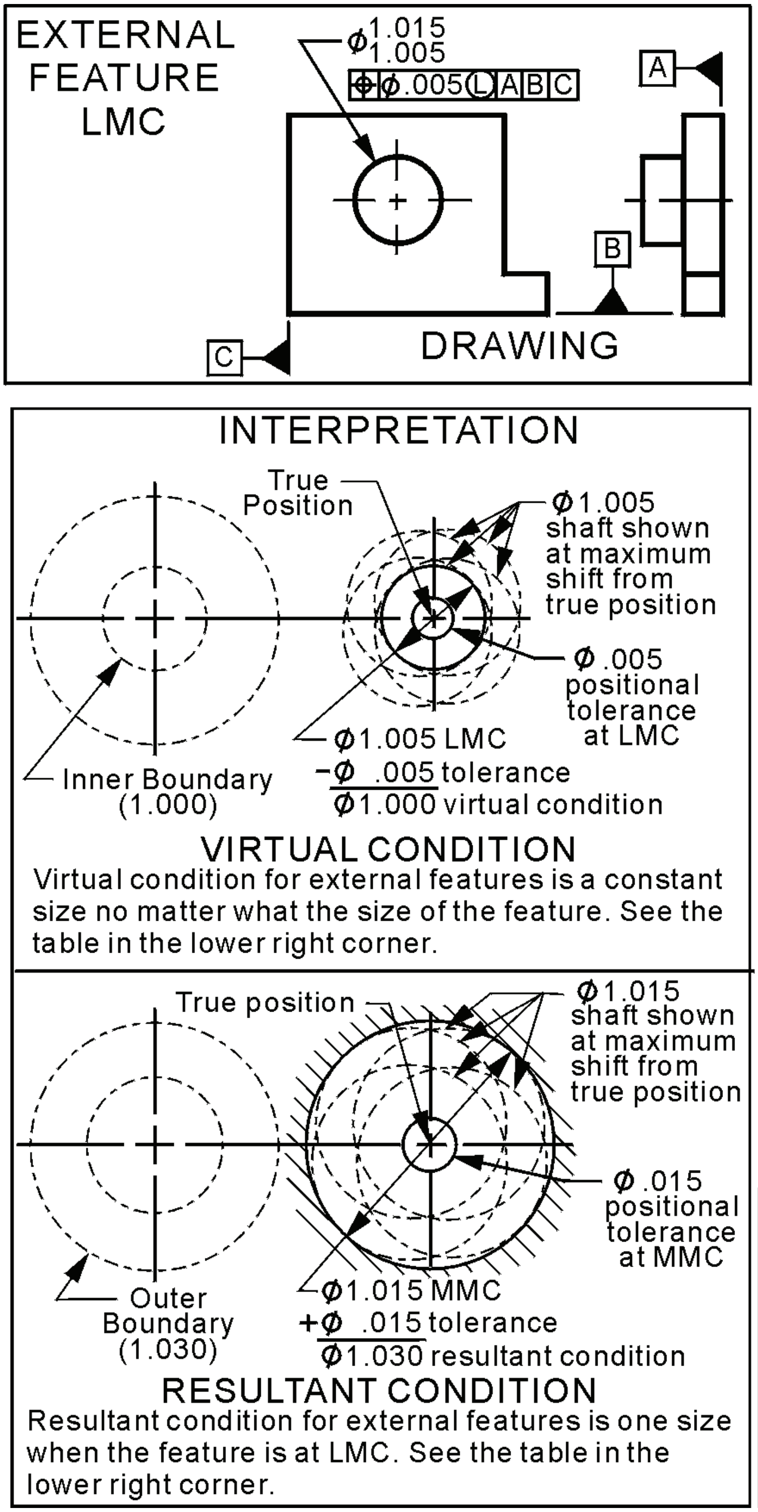

INCH	METRIC
.005	0.13
.006	0.15
.007	0.18
.008	0.20
.009	0.23
.010	0.25
.011	0.28
.012	0.30
.013	0.33
.014	0.36
.015	0.38
1.000	25.40
1.005	25.53
1.006	25.55
1.007	25.58
1.008	25.60
1.009	25.63
1.010	25.65
1.011	25.68
1.012	25.70
1.013	25.73
1.014	25.76
1.015	25.78
1.030	26.16

SHAFT SIZE	POS. TOL.	VIRT. COND.	RESUL. COND.
1.015	.015	↑	
1.014	.014		
1.013	.013		
1.012	.012		
1.011	.011		
1.010	.010	1.000	
1.009	.009		
1.008	.008		
1.007	.007		
1.006	.006		
1.005	.005	↓	1.030

Worst-Case Resultant Condition

EXTERNAL FEATURE

LMC CONCEPT-VIRTUAL AND RESULTANT CONDITION BOUNDARIES

FIGURE 5-6

5.4 GENERAL REQUIREMENTS FOR TOLERANCING.

5.4.1 Application. Tolerances may be expressed as follows:

a. as direct limits or as tolerance values applied directly to a dimension. See PARAGRAPH 5.4.2.1c thru g.

b. as a geometric tolerance, as described in PARAGRAPH 5.11.

c. as a note referring to specific dimensions.

d. as specified in other documents referenced on the drawing for specific features or processes. See PARAGRAPH 5.4.3.3.

e. in a general tolerance block referring to all dimensions on a drawing for which tolerances are not otherwise specified. See PARAGRAPH 5.4.3.

5.4.2 Selection Of Units Of Measure. Unless otherwise specified, the unit of measurement selected should be in accordance with the policy of the user. For other than purely commercial applications, the contract must specify use of the ASME Y14.100 including Appendices A thru E as applicable. Unless otherwise specified, metric units of measure for new designs in accordance with ASTM SI 10 (X-Ref: IEEE SI 10). Contract must impose using inch units of measure in lieu of metric units. Whichever unit of measure is selected, the drawing shall contain a note stating “UNLESS OTHERWISE SPECIFIED, ALL DIMENSIONS ARE IN INCHES” or (“IN MILLIMETERS” as applicable) within the Title block or General Notes. See PARAGRAPH 5.4.3.

INCH		METRIC	
ANSI Y14.5-1973		ASME Y14.5M -1994 & ANSI Y14.5M - 1982	
DIMENSION AND TOLERANCES SHALL BE EXPRESSED IN INCHES AND DECIMAL PARTS OF AN INCH OR IN ANGULAR UNITS.		DIMENSION AND TOLERANCES SHALL BE EXPRESSED IN MILLIMETERS AND DECIMAL PARTS OF A MILLIMETER OR IN ANGULAR UNITS.	
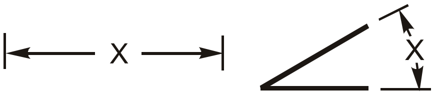		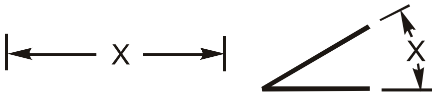	
i.e. .0625 .75 1.000 1.125	i.e. 0° 0' 45" 25° 15' 25° 30' 45" 25.6°	i.e. 1.59 19.05 25.4 28.58	i.e. 0° 0' 45" 25° 15' 25° 30' 45" 25.6°
See PARAGRAPH 5.4.2.1	See PARAGRAPH 5.4.2.2	See PARAGRAPH 5.4.2.1	See PARAGRAPH 5.4.2.2

NOTES: Identification of Linear Units

1. On drawings where all dimensions are either inches or millimeters, individual identification of linear units is not required.

2. On drawings where a combination of inches and millimeters linear units are used, the drawing that is predominately inch and where some dimensions are in millimeters, the symbol “mm” shall follow the millimeter values. The reverse applies that the abbreviation “IN” shall follow the inch values on drawings that are predominately in millimeter linear units.

5.4.2.1 RULES APPLICABLE TO UNITS OF MEASURE.

INCH

When specifying decimal inch dimensions and tolerances.

a. Zeros shall not be used before the decimal point for values less than one inch.

.125	0.125
Correct	Incorrect

b. All decimals should have a minimum of two digits following the decimal point.

3.25 3.250--	3 3.2
Correct	Incorrect

WHEN
TITLE BLOCK TOLERANCE
IS

TWO-PLACE DECIMAL ± .03
THREE-PLACE DECIMAL ± .010

A DRAWING CALLOUT
FOR

3.00 3.000

MEANS and MEANS

3.00 ± .03 3.000 ± .010

METRIC

When specifying decimal millimeter dimensions and tolerances.

a. A zero is placed before decimal point for values less than one millimeter.

0.5	.5
Correct	Incorrect

b. When a millimeter dimension is a whole number, the decimal point and subsequent “trailing” zeros may be omitted.

3	3.00
Correct	*Unnecessary

*However, trailing zeros are retained when tolerances are specified as a function of decimal places. (Note: This practice is commonly used on metric drawings produced in the US.) Tolerances associated with dimensions in the conventional manner are shown as follows:

WHEN
TITLE BLOCK TOLERANCE
IS

ONE-PLACE DECIMAL ± 0.8
TWO-PLACE DECIMAL ±0.25

A DRAWING CALLOUT
FOR

75.0 75.00

MEANS and MEANS

75.0 ± 0.8 75.00 ± 0.25

5.4.2.1 (Continued)

INCH

c. A dimension and its tolerance, or both limits of a limit dimension, shall have an equal number of digits following the decimal point.

	Correct	Incorrect
(BILATERAL DIM)	$1.88^{+.02}_{-.01}$	$1.88^{+.025}_{-.01}$
(LIMIT DIM)	1.90 1.87	1.905 1.8
(BILATERAL DIM)	$1.878^{+.002}_{-.001}$	$1.878^{+.01}_{-.010}$
(LIMIT DIM)	1.880 1.877	1.888 1.87

METRIC

c. The number of digits required for the tolerance of millimeter dimensions may or may not be equal following the decimal point.

(1) In the case of bilateral tolerances, the plus and minus tolerances in millimeters must be shown with the same number of decimal places, using zeros as required.

Correct	Incorrect
$75^{+\,0.15}_{-\,0.10}$	$75^{+\,0.15}_{-\,0.1}$

(2) Equal bilateral tolerance are shown as follows:

75 ± 0.2 *and* 75 ± 0.15

Correct:

(3) In unilateral tolerance where either the plus or the minus tolerance is zero, the zero need not be followed by a decimal point and additional trailing zeros. Plus or minus signs are also unnecessary.

$75\,^{+\,0.5}_{\;\;0}$ and $75\,^{\;\;0}_{-\,0.5}$

Correct

(4) Limit dimensions are shown with the same number of digits for upper and lower limits:

Correct	Incorrect
75.15 75.00	75.15 75

Note that a whole number dimension which is associated with unilateral or bilateral tolerances is inscribed without a decimal point and trailing zeros (See 5.4.2.1b metric).

(5) Neither commas nor spaces shall be used to separate digits into groups in specifying millimeter dimensions on drawings.

Correct	Incorrect
6.0198	6,0198

5.4.2.1 (Continued)

INCH	METRIC

d. Both tolerances shall be specified when using unilateral tolerances. On existing drawings where only one tolerance is shown, the unspecified tolerance shall be interpreted to be zero.

1.880 - .003 *Means* $1.880\ ^{+.000}_{-.003}$	48 - 0.08 *Means* $48\ ^{\ 0}_{-0.08}$

e. Unilateral and bilateral tolerances used with dimension lines shall show the tolerances following the dimension. Unilateral or unequal bilateral tolerances shall be shown with the plus tolerance above the minus tolerance. See FIGURE 5-2.

f. When unilateral or unequal bilateral tolerances are specified in general notes, the tolerances may be shown on the same line with the plus tolerance preceding the minus tolerance.

3.00 + .03 - .00 *and* 3.000 + .003 - .002	76 + 0.8 - 0 *and* 76 + 0.76 - 0.05

g. When unilateral tolerances are used, it is preferred that the dimensions specify the maximum position or MMC size with the tolerances applied to the minimum position or LMC size tolerance.

Position	$2.500\ ^{+.000}_{-.005}$	*Position*	$63.5\ ^{\ 0}_{-0.13}$
Shaft	$\phi 1.000\ ^{+.000}_{-.002}$	*Shaft*	$\phi 25.4\ ^{\ 0}_{-0.05}$
Hole	$\phi .998\ ^{+.002}_{-.000}$	*Hole*	$\phi 25.35\ ^{+0.05}_{\ 0}$

h. Normally when the tolerance for a dimension is equal to the standard title block tolerance, limit dimensions or dimensions with equal-bilateral tolerances are not used.

i. Limit dimensions shall be shown on drawings as follows:

(1) Limit dimensions shown in a vertical format shall show the maximum value above the minimum value.

5.4.2.1 (Continued)

(2) When limit dimensions are shown in a single line, the smaller limit precedes the larger limit with a dash separating the limits.

INCH	METRIC
← 1.880 - 1.887 →	← 47.75 - 47.93 →
and	*and*
Ø .990 - 1.000 THRU	Ø 25.15 - 25.40 THRU

j A single limit such as MIN or MAX is placed after a dimension where other elements of the design definitely determine the other unspecified limit. Features such as depths of holes, lengths of threads, corner radii, chamfers, etc., may be limited in this way. Single limits are used where the intent will be clear, and the unspecified limit can be zero or approach infinity and will not result in a condition detrimental to the design.

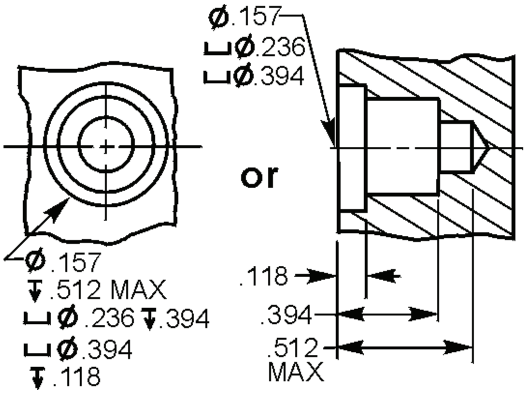

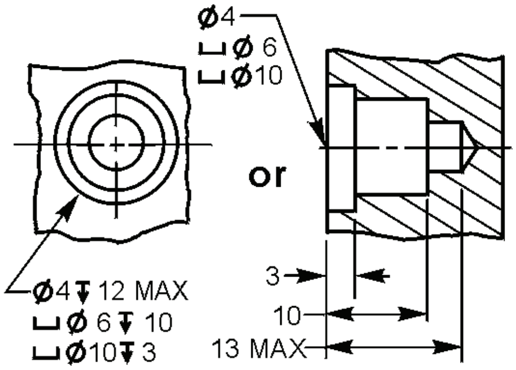

k. Where BASIC dimensions and geometric tolerances are used, the dimension and tolerance values contain the number of decimal places necessary to express the design requirements. For basic dimensions and geometric tolerances based on inches, the basic dimension value is expressed with the same number of decimal places as the tolerance. For basic dimensions and geometric tolerances based on metric units (millimeters), the basic dimension value is not required to be expressed with the same number of decimal places as the tolerance; thus the basic dimension value is not required to have trailing zeroes.

1.000	1.00	25	25.00
with	*with*	*with*	*with*
⌖ | Ø .005 Ⓜ | A | B | C	⌖ | Ø .005 Ⓜ | A | B | C	⌖ | Ø 0.13 Ⓜ | A | B | C	⌖ | Ø 0.13 Ⓜ | A | B | C
Correct	Incorrect	Correct	Incorrect

5.4.2.2 Rules Applicable To Angular Units. When specifying angular dimensions and tolerances the following rules shall apply to INCH and METRIC drawings alike.

a. A 90° angle is not specified where centerlines and surfaces are shown on drawings intersecting at right angles. A 90° implied angle is understood to apply. The applicable tolerance is governed by general angular tolerance notes or general title block tolerance values. A 90° BASIC angle applies for orientation, runout, position, profile and other geometric tolerances where centerlines of features in a pattern are shown at implied 90° angles, and to surfaces shown at implied 90° angles where orientable geometric tolerances apply. This practice is extended to 0°, 90°, 180°, 270°, 360°, etc. angles.

5.4.2.2 (Continued)

b. Angular dimensions and tolerances shall be expressed in degrees (°), in decimal parts of a degree or in minutes (′) and seconds (″) as required. See FIGURES 5-7a thru 5-7e. When only minutes or seconds are specified, the number of minutes or seconds shall be preceded by 0° or 0°0′, as applicable. See FIGURE 7-3d.

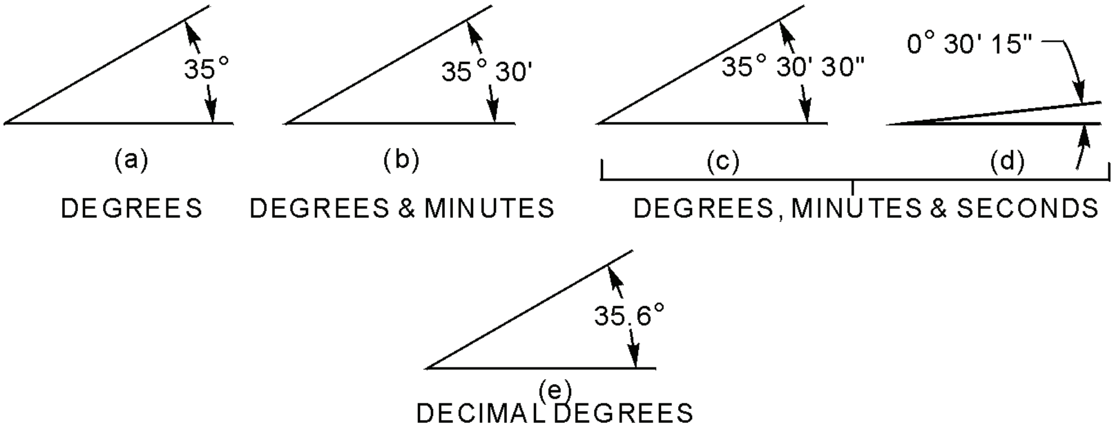

EXPRESSION OF ANGULAR UNITS
FIGURE 5-7

An exception to this rule occurs when the standard title block tolerance applies and is specified in degrees only and the field of the drawing uses degrees and parts of a degree.

c. An angular dimension and its tolerance or both limits of a limit dimension shall be held to the same units of measure. See FIGURE 5-7.1a thru 5-7.1d.

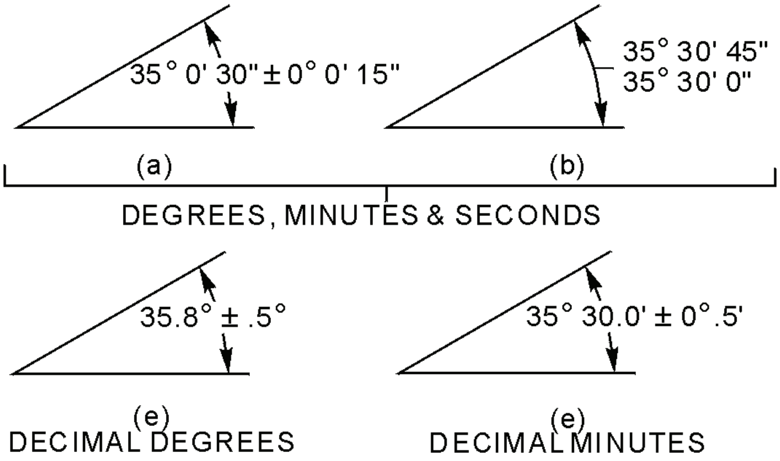

EXPRESSION OF ANGULAR UNITS AND APPROPRIATE TOLERANCE UNITS
FIGURE 5-7.1

d. The requirements of 5.4.2.1 d. through k. also apply to angular dimensions.

5.4.2.3 Rules Applicable To Tolerances. [Paragraph Deleted.]

5.4.2.4 Significant Difference Between Inch and Metric Millimeter Tolerance. General considerations must be taken with regard to the millimeter's significantly smaller size (≈1/40th of an inch [25.4mm = 1 inch]) compared to the inch when the conversion of the inch to millimeter occurs and the tolerance rule of the number of decimal places to the right remains.

FACT
1.000 (inch) = 25.4 mm

THEN
*1.000 = .990 - 1.010
NOTE: Plus & Minus .010 of an inch.

BECOMES
1.010
- .990
.020 Inch Tolerance

FACT
1.000 mm = .0394 Inch

THEN
* 1.000 In. = .99606 - 1.00394
= .996 -1.004 Rounded off
NOTE: Plus & Minus .010 mm

BECOMES
1.004
- .996
.008 In. Tolerance

* NOTE: Title block tolerance .XXX = ± .010

WHICH SHOWS
.020
- .008 (Lessor value due to metric conversion)
.012 Inch difference

As a rule, if the same limits are desired, a millimeter dimension will have more digits to the left of the decimal point and fewer decimal places on the tolerance side of the decimal point than a corresponding inch dimension. New tolerancing techniques must be used to compensate for these differences.

* 2 Inch = 50.80 mm
2.000 Expressed on drawing is
2.000 - 1.990 - 2.010

*NOTE: Title block tolerance (in Inches)
.XXX = ± .010 (0.25 mm)

*50.80 mm = 2 Inch
50.80 Expressed on drawing is
50.80 = 50.55 - 51.05

*NOTE: Title block tolerance (in mm)
.XX = ± 0.25 (.010 Inch)

5.4.2.4 (Continued)
If a designer is unfamiliar with metric conversions, determining tolerances will require more effort. As an aid, TABLE 5-1 shows commonly used inch tolerances converted to their rounded-off metric equivalents.

INCH	METRIC
CUSTOMARY TOLERANCE (Inch)	CONVERTED VALUE (mm)
.001	0.025
.004	0.1
.005	0.13
.010	0.25
.015	0.4
1/64	0.4
.02	0.5

COMPARISON OF TABLE VALUES

TABLE 5-1

5.4.3 Standard Tolerances. Dimensions shown without tolerance are controlled by the standard tolerances in the Title block, except for stock materials, dimensions on welding symbols, dimensions labeled REF, MAX, MIN, BASIC and similar dimensions that are otherwise controlled. Standard Title block tolerances may be used for implied 90° angles and angles shown without tolerances with the exclusions listed above. Other Angular tolerances shall be shown on the body of the drawing for each angle specified. See TABLE 5-3 for recommended tolerances for angular measure.

A TYPICAL TITLE BLOCK TOLERANCE INSERTION

a.

**UNLESS OTHERWISE SPECIFIED
DIMENSIONS ARE IN INCHES.
TOLERANCES ARE:**

DECIMALS	**ANGLES**
.XX ± .03	**± 2°**
.XXX ± .010	

DO NOT SCALE DRAWING

All dimensions, whole numbers or not, the number of "trailing zeros", or decimal places will determine the amount of tolerance signified.

e.g.: 3 inch dimension shown as 3.000

Means

3.000±.010

a.

**UNLESS OTHERWISE SPECIFIED
DIMENSIONS ARE IN MILLIMETERS.
TOLERANCES ARE:**

DECIMALS	**ANGLES**
.X ± 0.8	**± 2°**
.XX ± 0.25	

DO NOT SCALE DRAWING

In the event this standard tolerance block method used, “trailing zeros” must be provided when whole number dimensions are involved. This is contrary to PARAGRAPH 5.4.2.1b as presented and treated.

e.g.: 75 mm dimension shown as 75.00

Means

75 ± 0.25

b. Traditional two-step general tolerance notes are often too restrictive and rigid for users of metric dimensioning. Correct tolerance is very cost-effective and the following is an alternative title block tolerance.

TOLERANCES, (Except As Specified)		
OVER	TO	TOLERANCE
0	35.999	± 0.5
36	100.999	± 0.8
101	300.999	± 1
ANGLES		± 2°

NOTE: Further effective tolerance treatment provided by TABLES 5-2 thru 5-5.

5.4.3.1 Altering Format Tolerances. The format tolerances shall not be altered unless a larger tolerance is required for the majority of the dimensions. The revised tolerances cannot be less than the format tolerances and must always be progressively smaller as the number of decimal places increases, e.g., .XXX cannot have a larger tolerance than .XX. When a third tolerance is required, a four place decimal may be added. This is accomplished by adding the following flagnote with the applicable correction or addition. Note: Some contracts and company policies disallow changing the format (default) tolerance block.

INCH

X TOLERANCE ON DECIMALS

.XX ± .XX (Add applicable two place tolerance.)

.XXX ± .XXX (Add applicable three place tol.)

.XXXX ±.XXXX (Add applicable four place tol.)

METRIC

X TOLERANCE ON DECIMALS

.X ± 0.X (Add applicable one place tolerance.)

.XX ± 0.XX (Add applicable two place tol.)

The format tolerance(s) will be lined out and the flagnote number added in the block for the revised format tolerance(s).

UNLESS OTHERWISE SPECIFIED
DIMENSIONS ARE IN INCHES.
TOLERANCES ARE:
DECIMALS ANGLES
X ~~.XX ± .03~~ ± 2°
~~.XXX ± .010~~
DO NOT SCALE DRAWING

UNLESS OTHERWISE SPECIFIED
DIMENSIONS ARE IN MILLIMETERS.
TOLERANCES ARE:
DECIMALS ANGLES
X ~~.X ± 0.8~~ ± 2°
~~.XX ± 0.25~~
DO NOT SCALE DRAWING

5.4.3.2 Criteria For Metric Tolerance Values Used In Title Blocks. Recommended tolerance values which are used in METRIC Title blocks are determined by two (2) criteria: first the dimensions to be toleranced, and second, whether the work is fine, medium, or coarse See TABLES 5-2 & 5-3 (Ref: ASME B4.3) and TABLE 5-4 (Ref: ISO 2768-1). Tables may also be used to determine tolerances assigned independently of the values shown in the Title block. Note: Tolerances should be achievable using the applicable process(es), but first and foremost, tolerances must be functional. Thus the tolerances shown in Tables 5-2 – 5-5 should only be specified if they are functional.

INCH

METRIC

CLASS OF WORK	PERMISSIBLE DEVIATIONS FOR MEASURE OF LENGTH, mm							
	0.5 to 3	>3 to 6	>6 to 30	>30 to 120	>120 to 400	>400 to 1000	>1000 to 2000	>2000 to 4000
FINE	±0.05	±0.05	±0.1	±0.15	±0.2	±0.3	±0.5	——
*MEDIUM	±0.1	±0.1	±0.2	±0.3	±0.5	±0.8	±1.2	±2
COARSE	±0.2	±0.3	±0.5	±0.8	±1.2	±2	±3	±4
VERY COARSE	——	±0.5	±1	±1.5	±2.5	±4	±6	±8

*PREFERRED

RECOMMENDED TOLERANCE RANGES AS FUNCTION OF SIZE OF THE PART (mm)

TABLE 5-2

5.4.3.2 (Continued)

INCH

METRIC

CLASS OF WORK	NOMINAL SIZE IN mm				
	>10 ANGLE	>10 - 50 ANGLE	>50 - 120 ANGLE	>120 - 400 ANGLE	>400 ANGLE
*FINE & MEDIUM	±1°	±0°30’	±0°20’	±0°10’	±0°5’
COARSE	±0°30’	±1°	±0°30’	±0°15’	±0°10’
VERY COARSE	±3°	±2°	±1°	±0°30’	±0°20’

*PREFERRED

RECOMMENDED TOLERANCES FOR ANGULAR MEASURE (mm)
TABLE 5-3

CLASS OF WORK	NOMINAL SIZE RANGE		
	0.5 to 3	>3 to 6	>6 to 30
FINE & MEDIUM	±0.2	±0.5	±1
COARSE & VERY COARSE	±0.4	±1	±2

RECOMMENDED TOLERANCES RANGES FOR RADII AND CHAMFERS (mm)
TABLE 5-4

ON ALL HOLE DIAMETERS			
UNDER 0.35	+0.050 -0.013	13.01 THRU 19.50	+0.050 -0.013
0.35 THRU 3.00	+0.10 -0.02	19.51 THRU 26.00	+0.25 -0.03
3.01 THRU 6.50	+0.12 -0.03	26.01 THRU 50.00	+0.30 -0.03
6.51 THRU 13.00	+0.15 -0.03	OVER 50.0	+0.40 -0.03

RECOMMENDED TOLERANCE RANGES FOR HOLES (mm)
TABLE 5-5

5.4.3.3 More Restrictive Tolerances For Cylindrical Parts. More restrictive tolerances may be required for limits and fits of cylindrical parts which are cataloged in ISO 286-1 and 286-2 for the selection of tolerances. Further reduction of selected and preferred tolerances for limits and fits is provided by ASME B4.1 (Inch) and ASME B4.2 (Metric).

INCH

a. A combination of mating shaft and bore might be dimensioned by a basic size and tolerance symbol per ASME B4.1, TABLE-5, Running & Sliding Fits, Class RC4 Column.

FOR EXAMPLE:

WHERE:

a. 1.0000 (Inch) = Basic size

SHAFT $\phi 1.0000\ f\,7 = \phi \begin{matrix}.9992\\ .9984\end{matrix}$

BORE $\phi 1.0000\ H8 = \phi \begin{matrix}1.0012\\ 1.0000\end{matrix}$

b. **Letter** The letter describes the fundamental deviation. Upper case for hole, lower case for shaft. From “A”, largest thru “Z”, smallest deviation.

c. **Numeral** The number describes the tolerance grade. From “0”, finest thru “16”, coarsest.

(From ASME B14.1 TABLE 5 Running and sliding fits.)

FIT, “BORE BASIS”, CLEARANCE FIT
H8/f7

METRIC

a. An equivalent metric combination of mating shaft and bore might be dimensioned by a basic size and tolerance symbol per ASME B4.2, TABLE 2 Close Running Fit Column.

FOR EXAMPLE:

WHERE:

a. 25 (mm) = Basic size

SHAFT $\phi 25\ f\,7 = \phi \begin{matrix}24.980\\ 24.959\end{matrix}$

BORE $\phi 25\ H8 = \phi \begin{matrix}25.033\\ 25.000\end{matrix}$

b. **Letter** The letter describes the fundamental deviation. Upper case for hole, lower case for shaft. From “A”, largest thru “Z”, smallest deviation.

c. **Numeral** The number describes the tolerance grade. From “0”, finest thru “16” coarsest.

(From ASME B4.2 TABLE 2 Close running fit.)

FIT, “BORE BASIS” ,CLEARANCE FIT
H8/f7

5.4.3.4 Rules For Rounding. Conversions from inch to millimeters, or the reverse, require rounding after calculation of the exact conversion to reflect the accuracy of the original value. Rounding values are given in TABLE 5-6 (Ref ASTM SI 10 X-Ref: IEEE SI 10).

WHEN THE FIRST DIGIT DROPPED IS:	THE LAST DIGIT RETAINED IS:
LESS THAN 5	UNCHANGED
5 OR MORE	INCREASED BY 1
5 FOLLOWED ONLY BY ZEROS	UNCHANGED IF EVEN, INCREASED BY 1 IF ODD

EXAMPLE:

1. 7.63943 ROUNDED TO THREE DECIMAL PLACES BECOMES 7.639.
2. 3.141592 ROUNDED TO THREE DECIMAL PLACES BECOMES 3.142.
3. 8.975000 ROUNDED TO TWO DECIMAL PLACES BECOMES 8.98.
4. 4.245000 ROUNDED TO TWO DECIMAL PLACES BECOMES 4.24.

<u>ROUNDING OF VALUES</u>
TABLE 5-6

5.4.3.4.1 Conversion And Rounding Of Toleranced Dimensions. The number of decimal places to be retained after rounding determines the accuracy requirements of the dimension being converted. Total tolerance assigned to an inch dimension will be used as a base for rounding the metric value obtained from conversion. Total tolerance is defined in TABLE 5-7.

TOLERANCE METHOD	SPECIFIED INCH DIMENSION	TOTAL TOLERANCE
BILATERAL	8.345±.005	.010
UNILATERAL	$2.437^{+.000}_{-.005}$	.005
LIMIT DIMENSION	6.8725 6.8720	.0005

<u>TOTAL TOLERANCE EXAMPLES</u>
TABLE 5-7

5.4.3.4.2 Conversion Practices For Bilateral, Unilateral And Limit Dimensions. Rounding-off practices are given in TABLE 5-8.

INCH
(Conversion to Metric)

TOLAL TOLERANCE (INCH)		ROUND CONVERTED mm VALUES TO
AT LEAST	LESS THAN	
.00004	.0004	4 DECIMAL PLACES
.0004	.004	3 DECIMAL PLACES
.004	.04	2 DECIMAL PLACES
.04 AND OVER		1 DECIMAL PLACE

METRIC
(Conversion to Inch)

TOLAL TOLERANCE (mm)		ROUND CONVERTED INCH VALUES TO
AT LEAST	LESS THAN	
0.002	0.02	5 DECIMAL PLACES
0.02	0.2	4 DECIMAL PLACES
0.2	2	3 DECIMAL PLACES
2 AND OVER		2 DECIMAL PLACE

<u>ROUND-OFF PRACTICE FOR TOLERANCED DIMENSIONS</u>
TABLE 5-8

5.4.3.4.2 (Continued)

INCH	METRIC
CONVERSION TO METRIC EXAMPLES: (WHERE: 1In. = 25.4 mm)	CONVERSION TO INCH EXAMPLES: (WHERE: 1 mm = .039370 In.)
a. BILATERALLY TOLERANCED DIMENSIONS, EQUALLY DISPERSED. i.e. 8.6572 ± .0015 1. 8.6572 In. X 25.4 mm = 219.89288 mm 2. ±.0015 In. X 25.4 mm = ± 0.0381 mm 3. COMBINE 1 & 2: 219.89288 ± 0.0381 mm 4. FROM TABLE 5-8, THE TOTAL TOLERANCE OF .003 Inch IS GREATER THAN .0004 AND LESS THAN .004, ROUND-OFF TO THREE (3) DECIMAL PLACES: **ANSWER** 219.893 ± 0.038 mm	a. BILATERALLY TOLERANCED DIMENSIONS, EQUALLY DISPERSED. i.e. 219.893 ± 0.038 1. 219.893 mm X .03937 In. = 8.6571874 In. 2. ±0.038 mm X .03937 In. = ± .001496 In. 3. COMBINE 1 & 2: 8.6571874 ± .001496 In. 4. FROM TABLE 5-8, THE TOTAL TOLERANCE OF 0.076 mm IS GREATER THAN 0.02 AND LESS THAN 0.2, ROUND-OFF TO FOUR (4) DECIMAL PLACES: **ANSWER** 8.6572 ± .0015 In.
b. BILATERALLY TOLERANCED DIMENSIONS, UNEQUALLY DISPERSED. i.e. 6.648 +.012 -.003 1. 6.648 In. X 25.4 mm = 168.8592 mm 2. +.012 In. X 25.4 mm = +0.3048 mm 3. -.003 In. X 25.4 mm = -0.0762 mm 4. COMBINE 1,2 & 3: 168.8592 +0.3048 -0.0762 mm 5. FROM TABLE 5-8, THE TOTAL TOLERANCE OF .015 Inch IS GREATER THAN .004 AND LESS THAN .04, ROUND-OFF TO TWO (2) DECIMAL PLACES: **ANSWER** 168.86 +0.30 -0.08 mm	b. BILATERALLY TOLERANCED DIMENSIONS, UNEQUALLY DISPERSED. i.e. 168.86 +0.30 -0.08 1. 168.86 mm X .03937 In. = 6.648012 In. 2. +0.30 mm X .03937 In. = +.011811 In. 3. -0.08 mm X .03937 In. = -.0031496 In. 4. COMBINE 1, 2 & 3: 6.648012 +.011811 -.0031496 In. 5. FROM TABLE 5-8, THE TOTAL TOLERANCE OF 0.38 mm IS GREATER THAN 0.2 AND LESS THAN 2, ROUND-OFF TO THREE (3) DECIMAL PLACES: **ANSWER** 6.648 +.012 -.003 In.
c. UNILATERAL TOLERANCED DIMENSIONS, i.e. 7.3638 +.0015 -.0000 1. 7.3638 In. X 25.4 mm = 187.04052 mm 2. +.0015 In. X 25.4 mm = +0.0381 mm 3. COMBINE 1 & 2: 187.04052 +0.0381 -0.0000 mm 4. FROM TABLE 5-8, THE TOTAL TOLERANCE OF .0015 Inch IS GREATER THAN .0004 AND LESS THAN .004, ROUND-OFF TO THREE (3) DECIMAL PLACES: **ANSWER** 187.041 +0.038 -0 mm	c. UNILATERAL TOLERANCED DIMENSIONS, i.e. 187.041 +0.038 -0 1. 187.041 mm X .03937 In. = 7.3638041 In. 2. +0.038 mm X .03937 In. = +.001496 In. 3. COMBINE 1 & 2: 7.3638041 +.001496 -.000000 In. 4. FROM TABLE 5-8, THE TOTAL TOLERANCE OF 0.038 mm IS GREATER THAN 0.02 AND LESS THAN 0.2, ROUND-OFF TO FOUR (4) DECIMAL PLACES: **ANSWER** 7.3638 +.0015 -.0000 In.
d. LIMIT TOLERANCED DIMENSIONS, i.e. 5.3763 - 5.3773 1. 5.3783 In. X 25.4 mm = 136.55802 mm 2. 5.3773 In. X 25.4 mm = 136.58342 mm 3. COMBINE 1 & 2: 136.55802 - 136.58342 mm 4. FROM TABLE 5-8, THE TOTAL TOLERANCE OF .0010 Inch IS GREATER THAN .0004 AND LESS THAN .004, ROUND-OFF TO THREE (3) DECIMAL PLACES: **ANSWER** 136.558 - 136.583 mm	d. LIMIT TOLERANCED DIMENSIONS, i.e. 136.558 - 136.583 1. 136.558 mm X .03937 In. = 5.3762884 In. 2. 136.583 mm X .03937 In. = 5.3772727 In. 3. COMBINE 1 & 2: 5.3762884 - 5.3772727 In. 4. FROM TABLE 5-8, THE TOTAL TOLERANCE OF 0.025 mm IS GREATER THAN 0.02 AND LESS THAN 0.2, ROUND-OFF TO FOUR (4) DECIMAL PLACES: **ANSWER** 5.3763 - 5.3773 In.

5.4.4 Statistical Tolerancing. Unless otherwise specified, statistical tolerancing is the assigning of tolerances to related components of an assembly on the basis that the assembly tolerance is equated to the square root of the sum of the squares of the individual tolerances. When tolerances assigned by arithmetic stacking are restrictive, statistical tolerancing may be used for increased individual feature tolerance. The increased tolerance may reduce manufacturing cost, but should only be employed where the appropriate statistical process control will be used. For application see appropriate statistics or engineering design manuals.

5.5 FUNDAMENTAL RULES OF DIMENSIONING AND TOLERANCING (Mandatory):

a. Dimensioning and tolerancing shall **clearly define the engineering design intent**, that is, dimensioning and tolerancing shall clearly define the functional requirements for the item or system depicted.

b. Each dimension shall have a tolerance, except for those dimensions specifically identified as reference, maximum, minimum, or stock (commercial stock size). The tolerance may be applied directly to the dimension (or indirectly in the case of basic dimensions), indicated by a general note, or located in a supplementary block of the drawing format. See PARAGRAPH 5.4.3.

c. Dimensioning and tolerancing shall be complete so there is full understanding of the characteristics of each feature. Neither scaling (measuring the size of a feature directly from an engineering drawing) nor assumption of a distance or size is permitted, except as follows: (1) Undimensioned drawings such as loft; (2) Printed wiring; (3) Templates; (4) Master layouts prepared on stable material are excluded, provided the necessary control dimensions are specified; (5) Digital 2D or 3D CAD models used to provide part or all of the dimensional data for an item per the techniques defined in SECTION 26.

d. Dimension, extension, and leader lines should not cross each other unless absolutely necessary. When it is unavoidable, a dimension line is never broken except for insertion of the dimension. An extension or leader line may be broken where it passes through or adjacent to an arrowhead.

e. Dimensions are shown in a view that most clearly represents the form of the feature.

f. Sufficient dimensions shall be shown to clearly and completely define the form, size, orientation, and location of each feature as applicable.

g. A feature shall not be located by more than one toleranced dimension in any one direction.

h. A dimension shall be shown as reference by enclosing the dimension value (and sometimes its tolerance(s)) in parentheses **'( )'** if it is (1) a repeat of another dimension on the same drawing, (2) a repeat of a dimension specified on a subordinate or referenced document, (3) an accumulation of other dimensions, or (4) shown for informational purposes only. Note: basic dimensions are excluded from these requirements; a basic dimension may be shown on the same drawing multiple times without converting any of the occurrences to reference, because there is no tolerance that directly applies to a basic dimension. Care must be taken not to conflict with Fundamental Rule 5.5.y below.

i. Dimensions are shown outside the outline of the part, unless clarity dictates otherwise.

j. Dimensions are selected and arranged to minimize the tolerance accumulation between related features.

k. Each dimension shall be expressed clearly so that it can be interpreted in only one way.

l. The drawing should define a part without specifying manufacturing methods. Thus, only the diameter of a hole is given without indicating whether it is to be drilled, reamed, punched, or made by any other operation. Exception to this rule would be in the case of quality assurance, environmental information, or manufacturing process is essential to engineering requirements. When this occurs, it shall be specified on the drawing or referenced to a separate document.

m. Only the end product dimensions and data are shown on drawings unless essential to the definition of engineering requirements. When non-mandatory in-process manufacturing information is shown on the drawing, it shall be marked with a note similar to "NON-MANDATORY, MANUFACTURING DATA".

n. Chain dimensions may be used where they best represent the design requirements. If the dimensions include or invoke +/- tolerances, the accumulation of tolerances that accompanies chain dimensions must be acceptable for the functional requirements. Basic chain dimensions may be used as required, as there is no tolerance accumulation with basic dimensions.

5.5 (Continued)

o. Center lines, object lines or extension lines should not be used as dimension lines.

p. Dimensioning to hidden lines shall be avoided.

q. Maximum and minimum limits must be such that parts will assemble and function under all dimensional conditions that are within limits.

r. The word “TYPICAL” or the abbreviation "TYP" is not used. Indicate the number of places the dimension applies.

s. The term "ADVISORY" shall not be used in conjunction with any dimension or tolerance.

t. Wires, cables, sheets, rods and other materials manufactured to gage or code numbers shall be specified by linear dimensions indicating the diameter or thickness. Gage or code numbers may be shown in parentheses following the dimension.

u. A 90° angle applies where center lines and lines depicting features are shown on a drawing at right angles and no angle is specified. This practice is extended to 0°, 90°, 180°, 270°, 360°, etc. angles. See PARAGRAPH 5.4.2.2a.

v. A 90° basic angle applies where center lines of features in a pattern or surfaces shown at right angles on the drawing are located or defined by basic dimensions and no angle is specified. This practice is extended to 0°, 90°, 180°, 270°, 360°, etc. angles. See PARAGRAPH 5.4.2.2a.

w. All dimensions and tolerances apply in a free state condition. This does not apply to nonrigid parts.

x. Unless otherwise specified, all geometric tolerances apply for full depth, length and width of the feature.

y. Dimensions and tolerances apply only at the drawing level where they are specified. A dimension specified for a given feature on one level of drawing, (e.g., a detail dwg) is not mandatory for that feature at any other level (e.g., an assy drawing). Sometimes it is necessary to apply tolerances and control a feature defined on a lower level drawing at the assembly level. Consider a part that is subsequently welded into an inseparable assembly. All of the features on the part must satisfy the dimensioning and tolerancing of the detail drawing to satisfy their requirements as a detail part. However, the geometry of the part (and the dimensions and tolerances that apply to the part) may be subject to additional variation at assembly – this is always the case with welded and parts fastened with bolts, screws, rivets, etc. at assembly. The heat of welding and the fastener loads will deform the parts, so assembly-level tolerancing may be needed.

5.5.1 Choice Of Method And Position Of Dimensions. Parts and features should be dimensioned by the method that most clearly shows the design requirements. Bilateral, unilateral, and limit dimensions may all be used on the same drawing to achieve this requirement. All dimensions shall be placed parallel to the bottom of the page and generally midway between arrowheads. FIGURE 5-8 shows how dimensions are to be spaced.

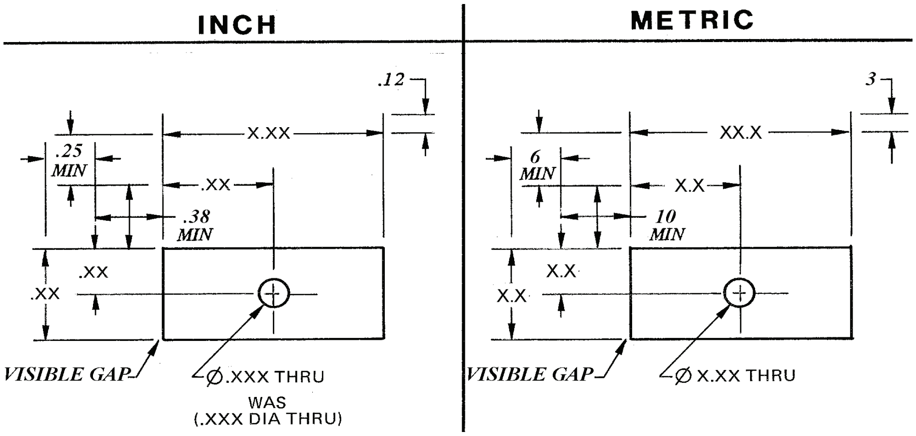

SPACING OF DIMENSIONS
FIGURE 5-8

5.5.2 Staggered Dimensions. Staggered dimensions shall be used to prevent interference with other dimensions. See FIGURE 5-9.

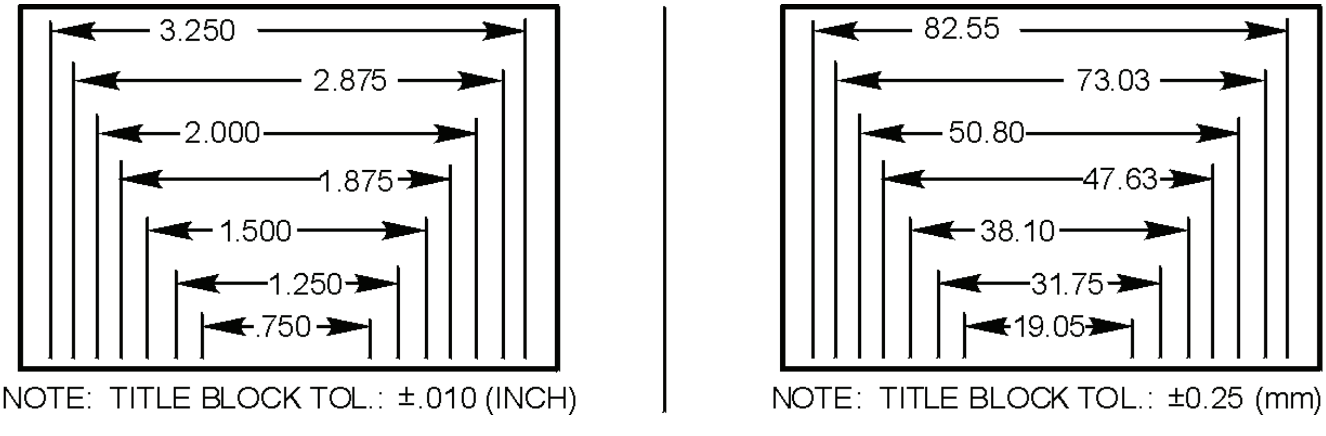

INCH **METRIC**

STAGGERED DIMENSIONS
FIGURE 5-9

5.5.3 Dimension Arrangement. Whenever it is impractical to follow customary location of dimensions, it is permissible to place the dimensions as shown in FIGURE 5-10.

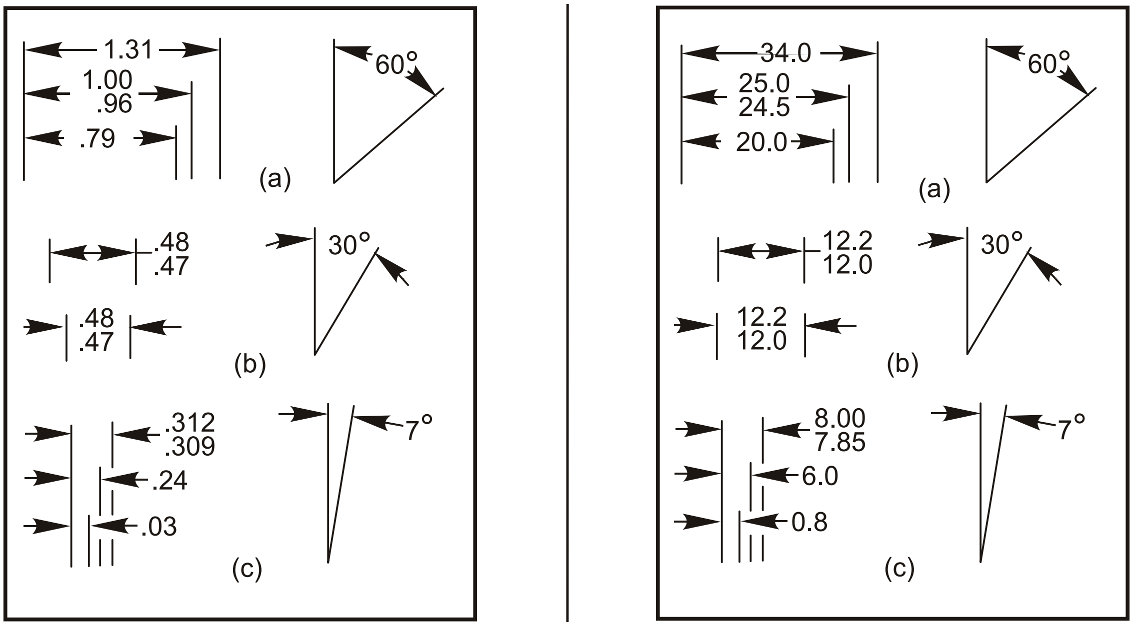

DIMENSION ARRANGEMENT
FIGURE 5-10

5.5.3.1 Dimension Alignment/Orientation. Dimensions shown with lines and arrowheads should be placed parallel to and read from the bottom of the drawing. See FIGURE 5-10.1

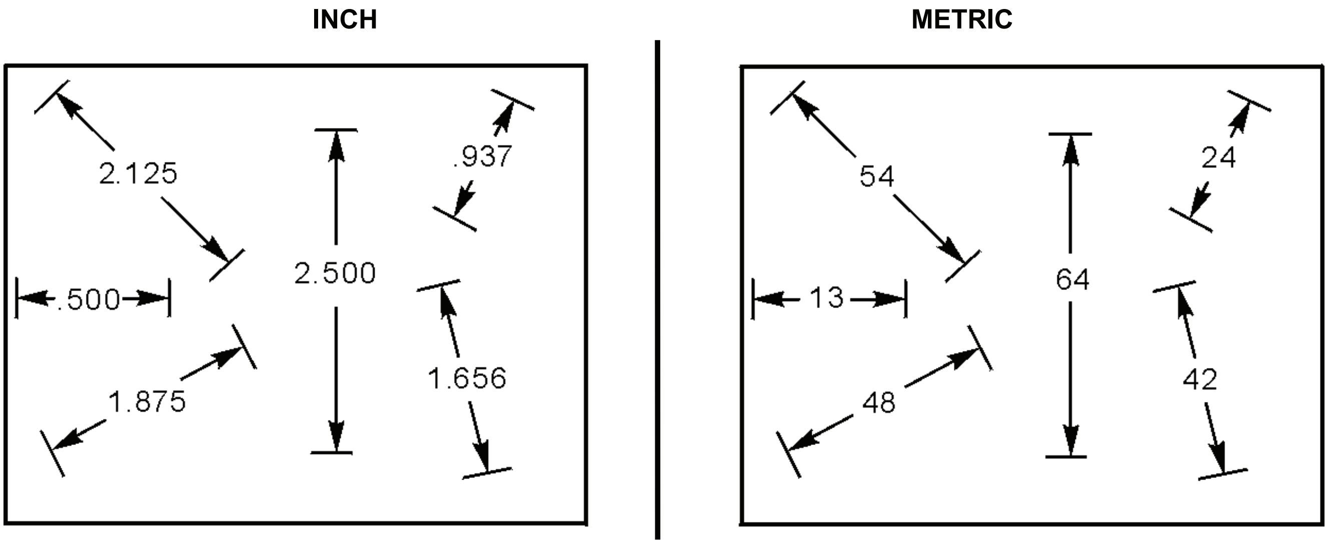

DIMENSION ALIGNMENT/ORIENTATION
FIGURE 5-10.1

5.5.4 Dimension Placement. Dimensions are applied by means of dimension lines, extension lines, and leaders from a dimension. See FIGURE 5-11.

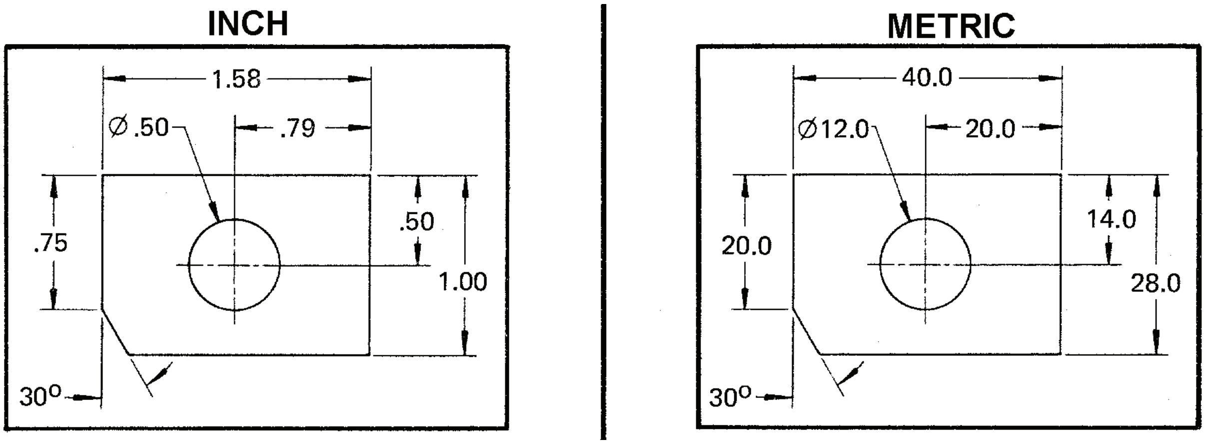

PLACEMENT OF DIMENSIONS
FIGURE 5-11

5.5.5 Dimension Location. Locate dimension lines on views showing true shapes and views instead of hidden ones. Hole size dimensions should be given by using leader lines locating the hole. See FIGURE 5-12.

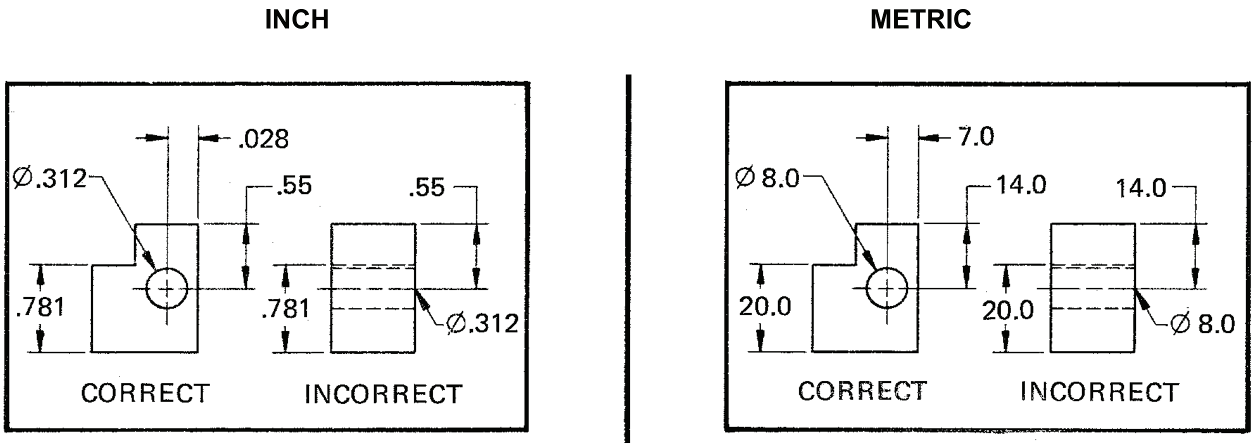

DIMENSION LOCATION
FIGURE 5-12

5.5.6 Dimension Grouping. Dimension lines should be aligned and grouped for uniform appearance and ease of reading whenever possible. Where an overall dimension is specified, one intermediate dimension is omitted or identified as a reference dimension "( )" See FIGURE 5-13. Or as may be the case, when the intermediate dimensions are more important, the overall dimension, if used is identified as the reference dimension.

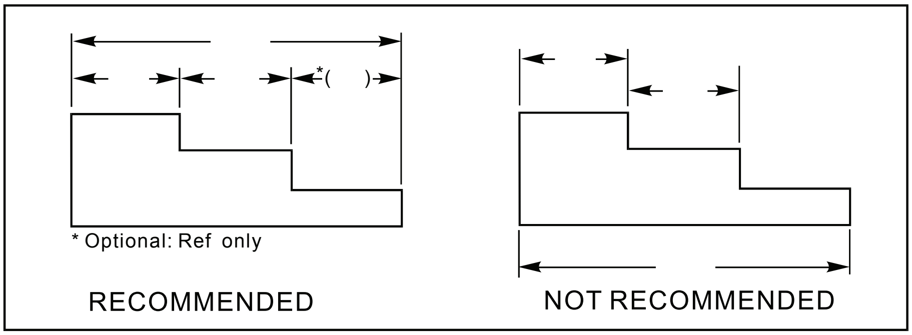

GROUPING OF DIMENSIONS
FIGURE 5-13

5.5.7 Dimension Lines.

5.5.7.1 Dimension Line Restrictions. A part outline, a centerline, an extension line or a continuation of any of these lines should be restricted from being used as a dimension line. See FIGURE 5-14. Exception to this rule is the dimensioning of irregular curves. See FIGURES 5-40 and 5-41.

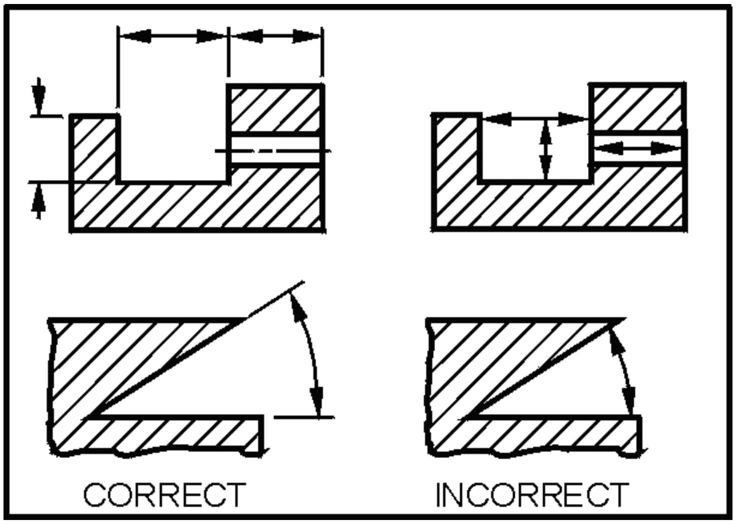

DIMENSION LINE RESTRICTIONS
FIGURE 5-14

5.5.7.2 Dimension and Extension Line Breaks. Dimension lines shall not be broken. Extension line breaks should be avoided. However, if space limitations are such that extension lines cross arrowheads or near an arrowhead, a break is permitted as shown in FIGURE 5-15.

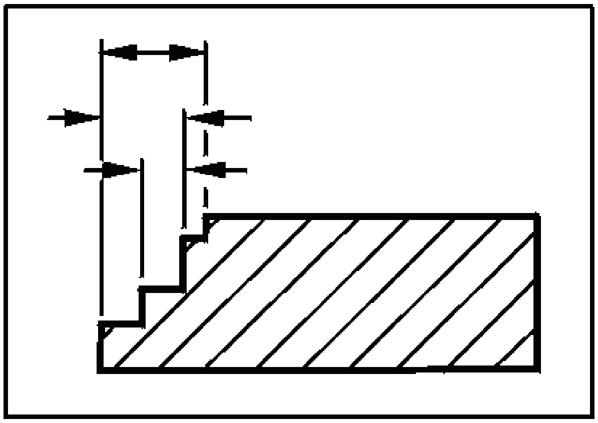

BREAKS IN EXTENSION LINES
FIGURE 5-15

5.5.7.3 Dimension Line Crossing. Crossing of extension lines and dimension lines should be avoided whenever possible. When unavoidable, the dimension lines should remain unbroken. To avoid crossing, the shortest dimension should be nearest the outline of the object being dimensioned. See FIGURE 5-16.

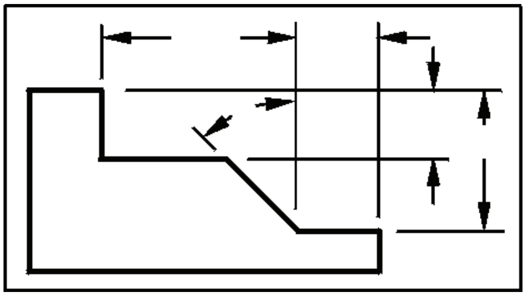

CROSSING EXTENSION LINES
FIGURE 5-16

5.5.7.4 Dimension Lines In Limited Space. Whenever limited space produces over-crowding of dimensions, extension lines may be drawn at an oblique angle from the usual right angle method as shown in FIGURE 5-17.

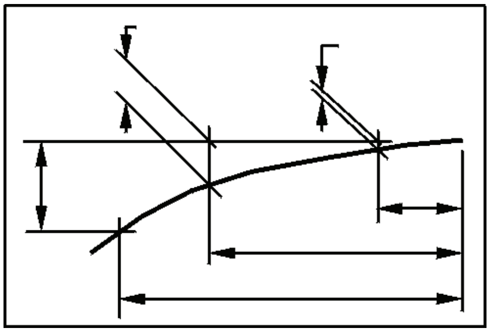

OBLIQUE EXTENSION LINES
FIGURE 5-17

5.5.7.5 Dimension Line Extension Crossing Point Location. When extension lines must cross in order to locate a dimension, use the method shown in FIGURE 5-18. Imaginary points for locating dimensions should be avoided.

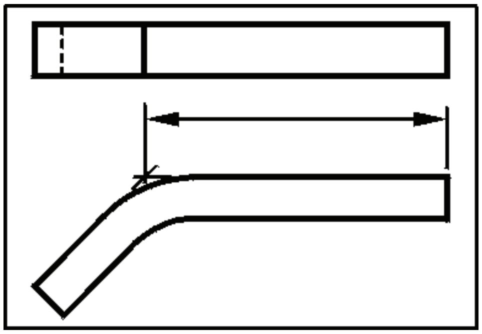

POINT LOCATIONS
FIGURE 5-18

5.5.7.6 Dimension Line With "Zigzag" Or Terminating With A "Double Arrowhead". Parts that are symmetrical about an axis and show only half of the part on the drawing (due to size or limited space, or a dimension to a known base line, a datum, an established point of reference, etc.) at a distance off the drawing are portrayed by the zigzag dimension line or by using a double arrowhead. SEE FIGURE 5-19 and 5-20.

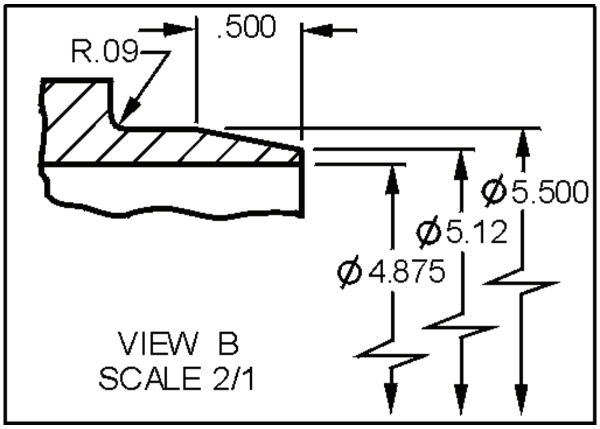

SYMMETRICAL ABOUT AN AXIS
FIGURE 5-19

Warning: The advent and implementation of CAD has brought tremendous power to the design process to quickly and accurately model nearly any feature imaginable. With such tools it is usually just as easy to model the entire part as it is to model half the part. The practice of modeling or drawing only half of a symmetrical part or feature originates back in the days of manual drafting, where each line drawn took additional time. Showing only half of a symmetrical part is less clear than showing the entire part. There is an increased chance of error and misinterpretation of the drawing in such cases. Best practice is to show the entire part or feature where space permits.

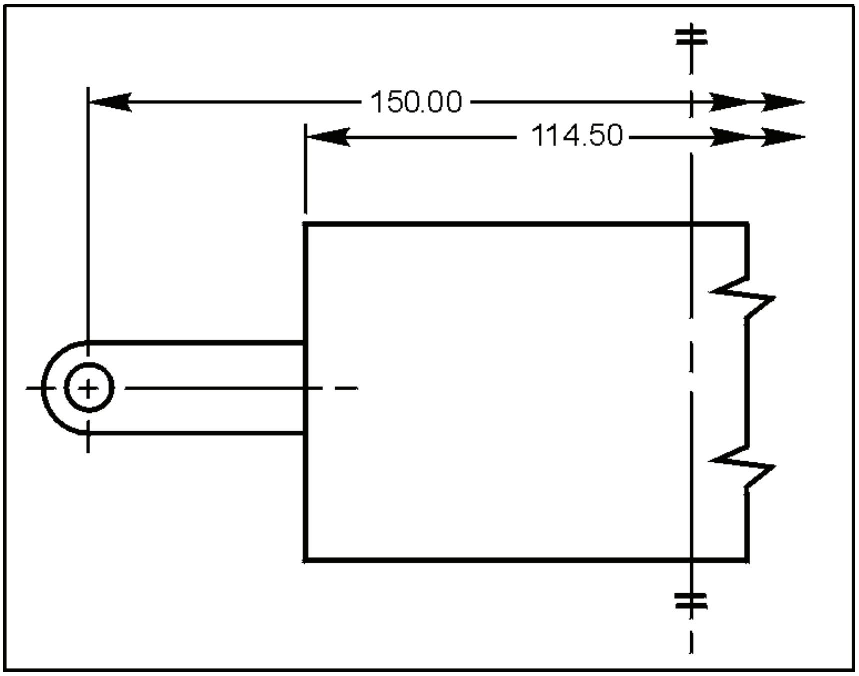

REFERENCE TO AN ESTABLISHED LINE, POINT, ETC. OF REFERENCE
FIGURE 5-20

5.5.7.7 Arc Dimension Lines. The dimension line of an angle is an arc drawn with its center at the apex of the angle. The arrowheads terminate at the extensions of the two sides. See FIGURE 5-21.

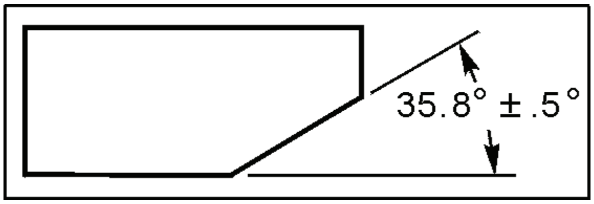

ARC DIMENSION LINES
FIGURE 5-21

5.5.7.8 Baseline Dimensions Without Dimension Lines (Rectangular Coordinate Dimensioning). Baseline dimensions are shown aligned to their horizontal and vertical extension lines. The dimension for the vertical dimension lines may be read from the right side of the drawing when line spacing is cramped. This is an exception to the basic rule of reading dimensions. See FIGURE 5-22.

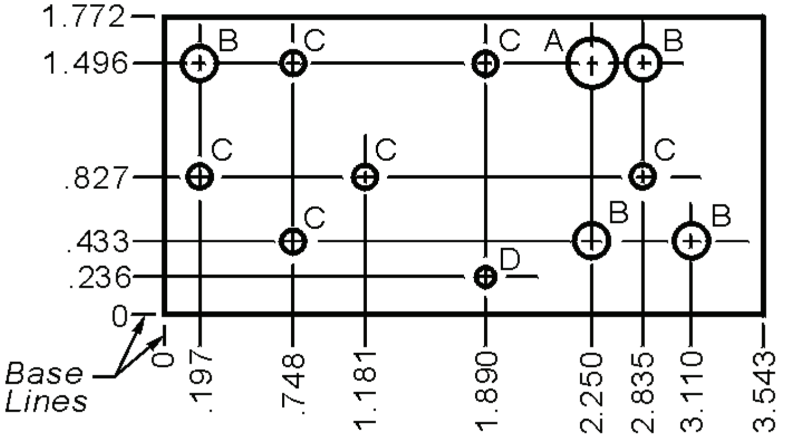

SIZE SYMBOL	A	B	C	D
HOLE Ø	.276	.188	.142	.122

INCH	METRIC
.122	3.1
.142	3.6
.188	4.8
.197	5
.236	6
.276	7
.433	11
.748	19
.827	21
1.181	30
1.496	38
1.772	45
1.890	48
2.520	64
2.835	72
3.110	79
3.543	90

BASELINE DIMENSIONING WITHOUT DIMENSION LINES
FIGURE 5-22

5.5.7.9 Tabular Dimensions. Tabular dimensions are listed in a table on the drawing rather than on the feature/part. This method is used when the location of a large number of similar shaped features is required. See SECTION 21, PARAGRAPH 21.11.3.2 and FIGURE 21-21.

5.5.8 Leaders (Leader Lines). A leader is used to direct a dimension, a note or a symbol to the intended feature or annotation on a drawing. Leaders generally terminate in an arrowhead, but they terminate with a dot when indicating a surface within the outline of the object. See PARAGRAPH 3.7.3 and FIGURE 5-23.

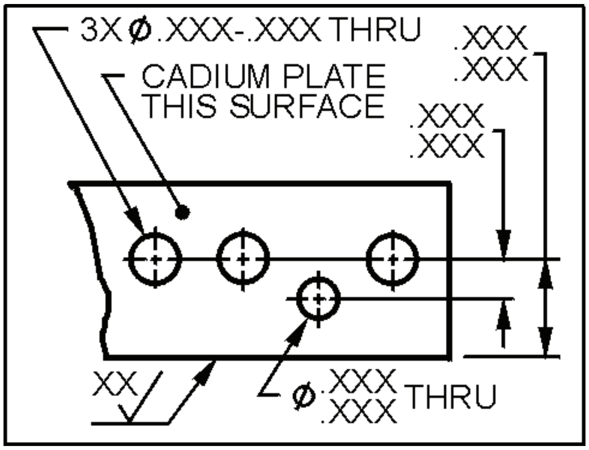

LEADERS
FIGURE 5-23

5.5.8.1 Leader Line Orientation. Except for a short straight line extended to or from letter mid-height, a leader line is generally an inclined straight line. Adjacent leader lines should be parallel if practicable. See FIGURE 5-23. Dimensions are best specified individually. However, notes and letter symbols should be used to avoid multiple and complicated leaders. See FIGURE 5-24 a & b.

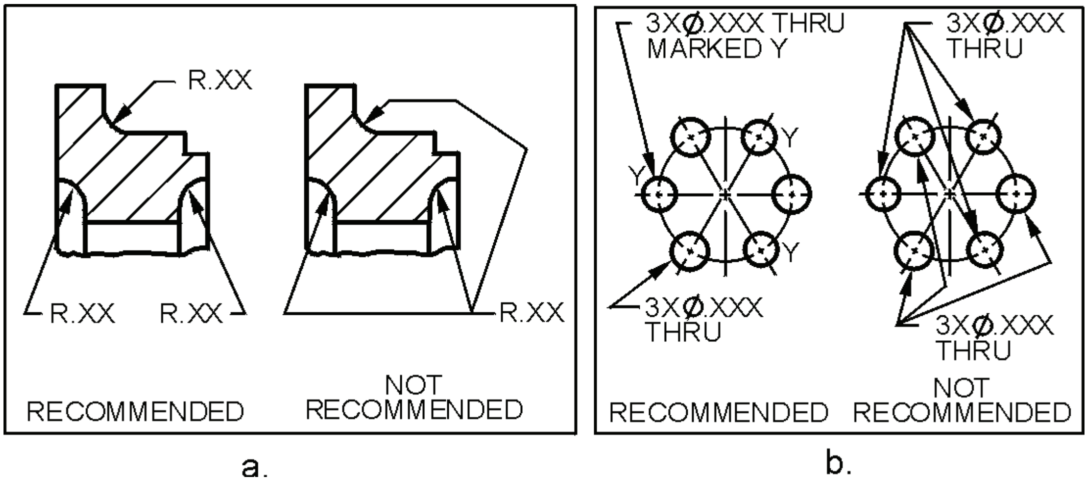

LEADER ORIENTATION
FIGURE 5-24

5.5.8.2 Leader Line Inclination. Leader lines should be inclined sufficiently to be clearly understood. See FIGURE 5-25a. Horizontal or vertical leaders should be avoided as well as leaders running parallel with the object outline or its sectional view cross section lines. See FIGURE 5-25b.

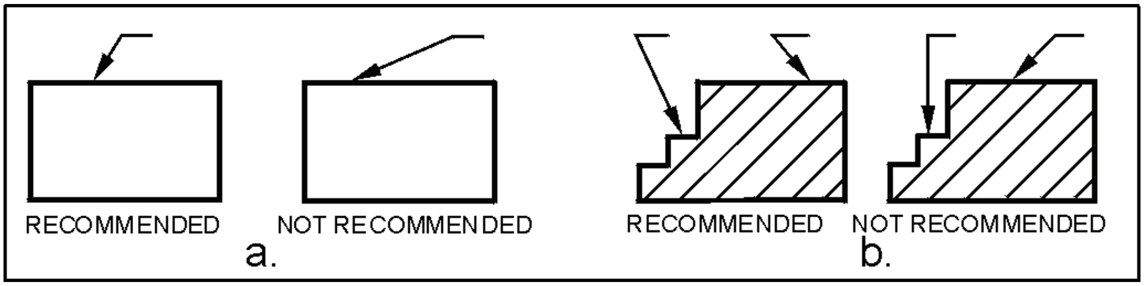

LEADER LINE INCLINE
FIGURE 5-25

5.5.8.3 Leader Line To Circle. Leader lines directed to a circle or circular arc, should be radial or directed to the center. See FIGURE 5-26.

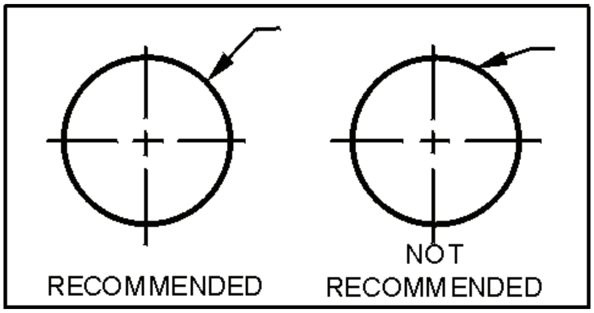

LEADER LINE TO CIRCLE
FIGURE 5-26

5.5.9 Selective Dimensioning. Areas of limited length or area that are to receive additional or special treatment are dimensioned as shown in FIGURE 5-27.

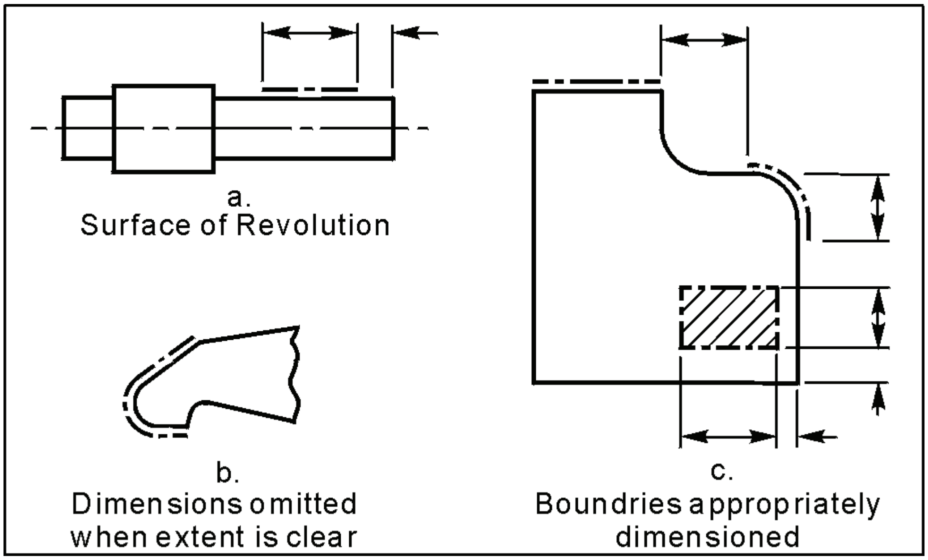

LIMITED LENGTH OR SURFACE AREA
FIGURE 5-27

5.6 DIMENSIONING AND TOLERANCING SYMBOLS AND THEIR USE.

NOTE: Dimensional characteristics are specified on the drawing by the use of symbols. When dimensional symbols do not adequately describe the desired condition, a note may be used, either separately or supplementing the symbol, but shall not be used in place of the symbol. TABLE 5-9 shows the approved symbol for each characteristic. TABLE 5-10 shows recommended size.

DIM SYMBOL	DEFINITION (FORM & PROPORTION SYMBOL)	SEE NOTE	SEE FIGURE
R	RADII This is an uncontrolled radii; it can have flats, angular reversals and need not be tangent.	1	5-28 THRU 5-39
CR	CONTROLLED RADIUS	1 & 2	5-29
SR	SPHERICAL RADIUS	1	5-43
Ø	DIAMETER	1	5-45
SØ	SPHERICAL DIAMETER	1	5-44
X	NUMBER OF TIMES OR PLACES	5	5-71
(XXX)	REFERENCE DIMENSION Applies only to dimensions.		See PARA. 5.3.65 & FIG 5-76
□	SQUARE Single dimension applies to square shape.	1	5-53
⟨ST⟩	STATISTICAL TOLERANCING Symbol follows the dimension.		5-74
$\overset{\frown}{\text{XXX}}$	ARC LENGTH Symbol placed aboved the dimension.	3	5-42
⌲	CONICAL TAPER	1	5-65, 5-66 5-67 & 5-68
⌳	SLOPE	1	5-69
	ALL AROUND		5-123
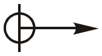	DIMENSION ORIGIN Used in lieu of a arrow head.	4	5-70 & -5-84
	SYMMETRICAL OUTLINE		5-59
⌴	COUNTERBORE OR SPOTFACE (spotface has no depth symbol)	1	5-49 & -5-50
⌵	COUNTERSINK	1	5-51 & -5-52
↧	DEPTH	1	5-47
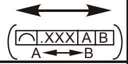	BETWEEN Symbol is placed under the profile feature control frame with between letters.		5-75
- —— - —— - (Thick line)	CHAINLINE Indicates limited length or area of a surface to recieve additional treatment per limits specified on drawing		5-27

NOTES: (Next Page)

DIMENSIONAL SYMBOLS
TABLE 5-9

TABLE 5-9 (Continued)

NOTES:

1. Radial dimension values are preceded by an R, CR or SR symbol depending on the type of radius. Diametral dimension values are preceded by a Ø or SØ symbol depending on the type of diameter. Unless otherwise specified, the symbol and the value are not separated by a space.

2. For controlled radii, the radial contour of a feature within the crescent-shaped zone must be a fair curve without sudden angular deviations or flats. Radii taken at all points of contour of part shall be within the minimum and maximum limits and tangent to the adjoining surfaces.

   Note: Controlled radii as defined above and in ASME Y14.5M-1994 are impossible to achieve, as the requirements for a fair curve without reversals that is also tangent to the adjacent surfaces means a perfect tangential curve is required. There has never been nor will there ever be a perfect feature manufactured. Thus, some allowable deviation from perfection is physically necessary. Some companies that believe the controlled radius is useful for defining the functional requirements for their parts have modified and redefined the controlled radius (CR) tolerance such that they have allowed for deviation from a perfect curve, and they have quantified the amount of the allowable deviation. If it is desired to use a CR specification, additional clarification such as described above should be provided to allow for proper manufacture of the feature.

3. Symbol used to indicate a linear dimension is an arc and is measured on the curved surface. The symbol is placed above the dimension.

4. Origin symbol is used to indicate that a dimension between two features shall originate from one feature (plane, axis or center plane) and not the other. If the origin is a plane, the origin is generated from the high points of the part's surface. If the origin is an axis, the origin is generated from the best fit cylinder contacting the high points of the part's cylindrical surface. This symbol is not to be used with geometric tolerancing applications.

5. An "X" may be used to specify repetitive dimensions and features along with a numerical value to indicate the number of places or times. The dimension or feature is required. There shall be a space between the "X" and the dimension.
   Note: The use of "PLACES" or "TYPICAL (TYP)" is no longer used.

   e.g.: 6X .312
   4X Ø.250

6. An upper case "X" may be used to indicate "BY" between coordinate dimensions. In such cases the "X" shall be preceded and followed by one character space.

   e.g.: .250 X 1.000
   .062 X 45°

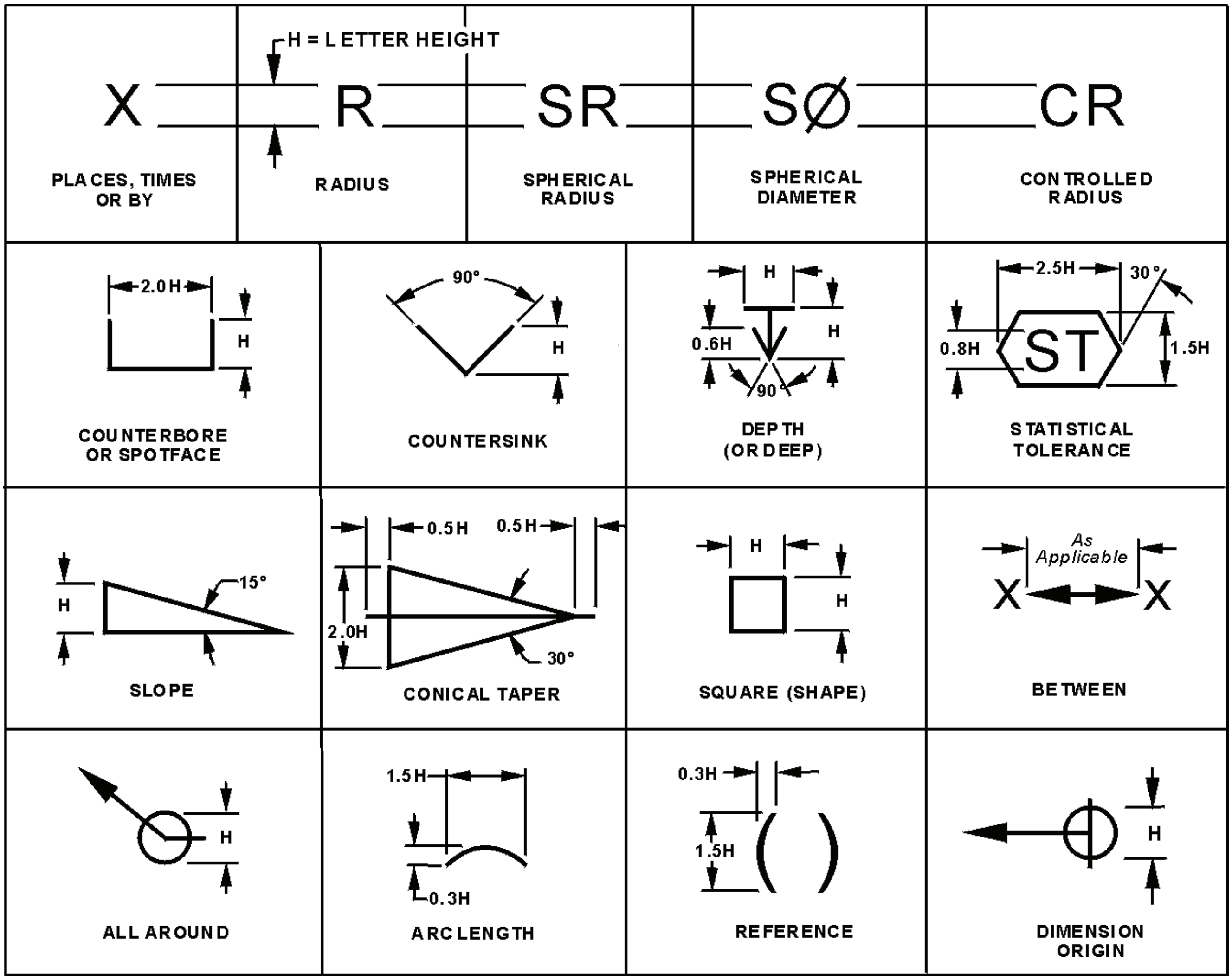

FORM AND PROPORTION OF DIMENSIONING SYMBOLS
TABLE 5-10

5.6.1 Radius Symbols. Each radius callout or dimension is preceded by the appropriate symbol "R", “CR” or “SR” as shown in TABLE 5-9. A radius line uses only one arrowhead at the end of the line touching the arc from either side as space permits. See FIGURE 5-28. Whenever a part has numerous radii of the same dimension, the symbol "X" (multiple times) or a note may be used instead of dimensioning each radius separately.

5.6.1.1 Center Of Radius Not Dimensionally Located. Where the location of the center of the radius is not dimensionally located, the center shall not be indicated. See FIGURE 5-28 and 5-29. Fillets and corner radii typically fall in this category.

5.6.1.2 Radius (R) Tolerance. A radius (corner or otherwise) symbol, “R” creates a zone defined by two arcs (the minimum and maximum radii). The part surface must lie within this zone. See FIGURE 5-28.

5.6.1.2 (Continued)

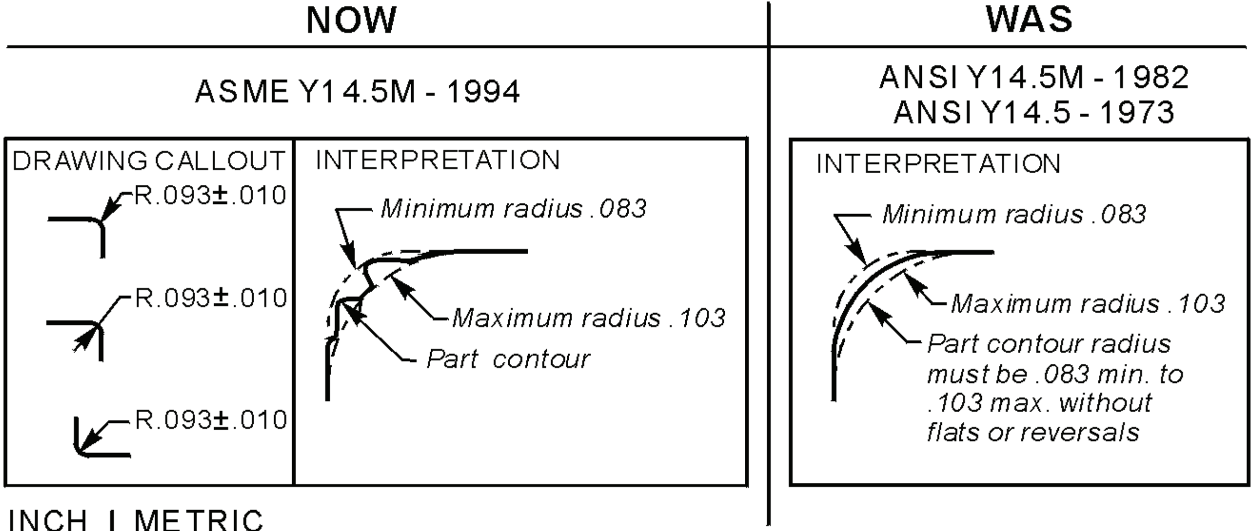

INCH	METRIC
.010	0.25
.083	2.10
.093	2.36
.103	2.62

SPECIFYING A RADIUS WHEN RADII CENTERS ARE NOT DIMENSIONALLY LOCATED
FIGURE 5-28

5.6.1.3 Controlled Radius (CR) Tolerance. A controlled radius (corner or otherwise) symbol, “CR”, creates a tolerance zoned defined by two arcs (the minimum and maximum radii) that are tangent to the adjacent surfaces. When specifying a controlled radius the part contour within the crescent-shaped tolerance zone must be a faired curve without reversals. See FIGURE 5-29.

INCH	METRIC
.010	0.25
.083	2.10
.093	2.36
.103	2.62

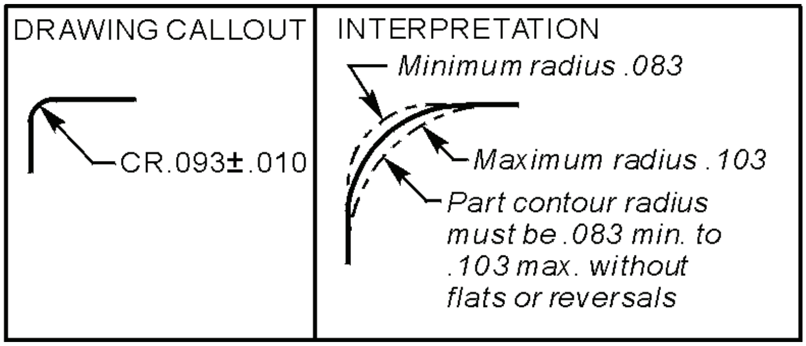

SPECIFYING A CONTROLLED RADIUS WHEN RADII CENTERS ARE NOT DIMENSIONALLY LOCATED
FIGURE 5-29

5.6.1.4 Center Of Radius Dimensionally Located. Where the location of the center of the radius is important and space permits, a dimension line is drawn from the radius center with the arrowhead touching the arc, and the dimension is placed between the arrowhead and the center. See FIGURE 5-30.

5.6.1.4 (Continued)

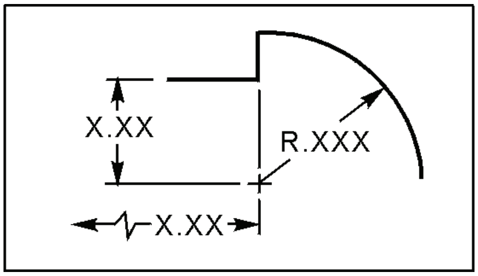

CENTER OF RADIUS DIMENSIONALLY LOCATED
FIGURE 5-30

5.6.1.5 Center Of Radius Dimensionally Located To Govern Shape. Where the location of the center of the radius governs the shape of the object, dimensions are given to locate the center of the radius by showing short crossed dimension lines. See FIGURE 5-31.

5.6.1.6 Center Of Radius Located By Other Dimensional Features. Where the location of center of the radius is governed by other dimension features such as tangent surfaces, the drawing must clearly show it. See FIGURE 5-32.

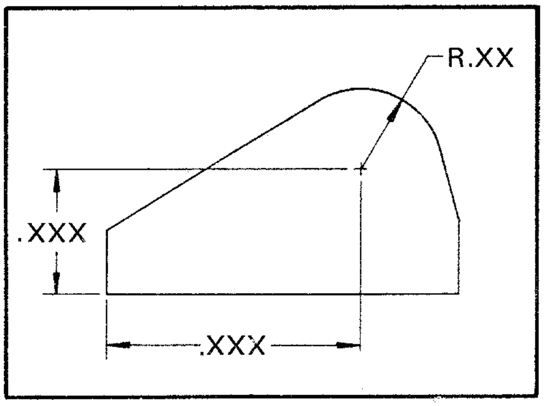

RADII WITH LOCATED CENTERS
GOVERN SHAPE
FIGURE 5-31

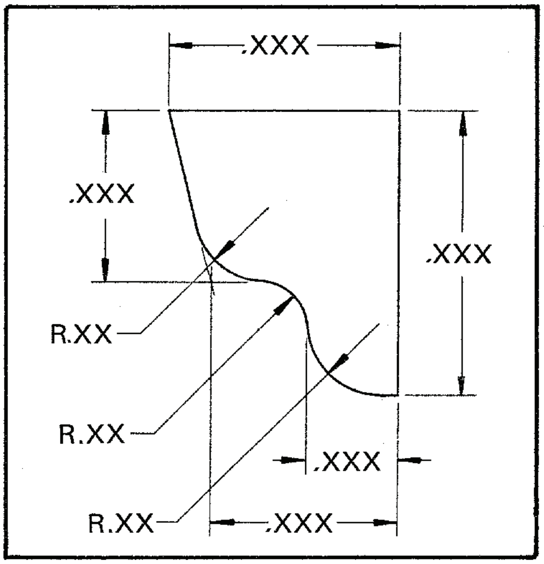

RADII WITH UNLOCATED CENTERS
FIGURE 5-32

5.6.1.7 Center Of Radius Located By Foreshortened Dimension Line. Where the center of a radius is outside of the drawing, or interferes with another view, the radius dimension line may be broken and foreshortened. See FIGURE 5-33. The portion of the line next to the arrowhead should be radial relative to the curved line.

5.6.1.8 Center Of Radius Dimensionally Located With Foreshortened Dimension Line. Where the radius is foreshortened and the center is located by coordinates, the dimensions locating the center should be shown. See FIGURE 5-34.

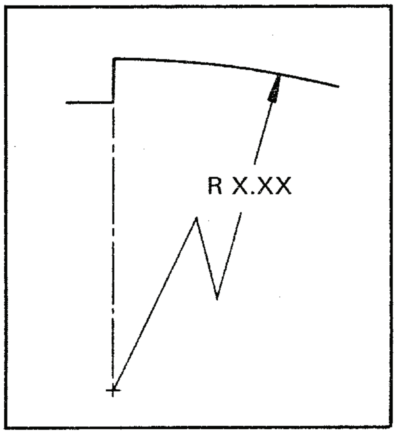

FORESHORTENED RADII
FIGURE 5-33

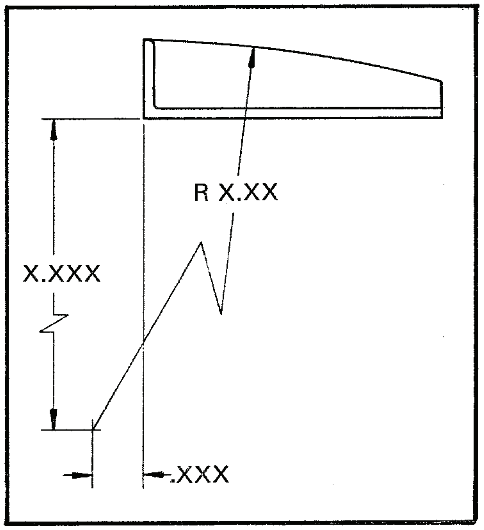

OFFSET FORESHORTENED RADII
FIGURE 5-34

5.6.1.9 True Dimension. When dimensioning a feature in a view that does not show the true profile of the feature, the term "TRUE" may be added to the dimension as a matter of convenience to avoid showing an auxiliary view. See FIGURE 5-35. Note: This is not preferred practice. It is better to show the dimension in an auxiliary view that includes the true profile of the feature.

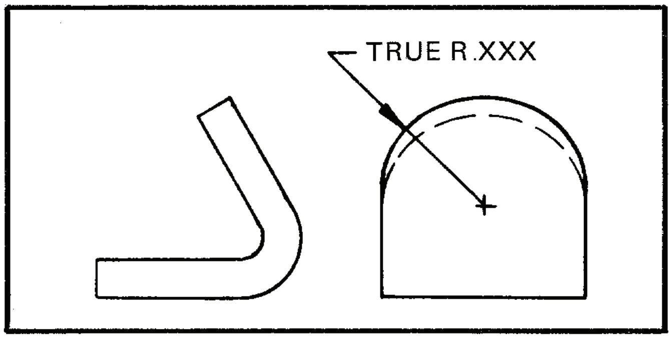

TRUE DIMENSIONS
FIGURE 5-35

5.6.1.10 Rounded Ends. Features with fully rounded ends are dimensioned by giving the overall length and width, and indicating the radius as "R". See FIGURE 5-36.

5.6.1.11 Partially Rounded Ends. For features with partially rounded ends, the radii are dimensioned. See FIGURE 5-37.

5.6.1.10 & 5.6.1.11 (Continued)

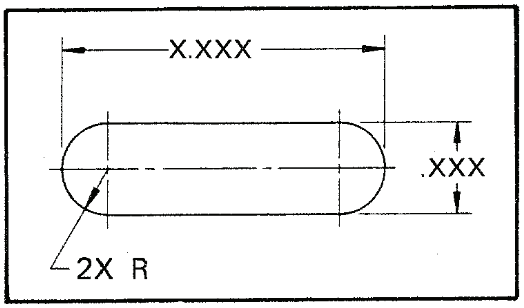

ROUNDED ENDS
FIGURE 5-36

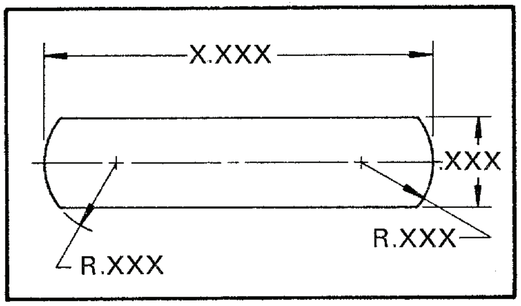

PARTIALLY ROUNDED ENDS
FIGURE 5-37

5.6.1.12 Rounded Corners. For parts with rounded corners, the dimensions define the edges and the radii are tangent. See FIGURE 5-38.

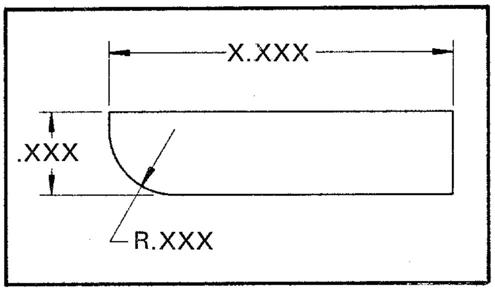

ROUNDED CORNERS
FIGURE 5-38

5.6.1.13 Radii Outline. A curved outline composed of two (2) or more radii is made by giving dimensional sizes of all radii and locating the necessary centers by coordinates. Other radii are located on the basis of their points of tangency. See FIGURE 5- 39.

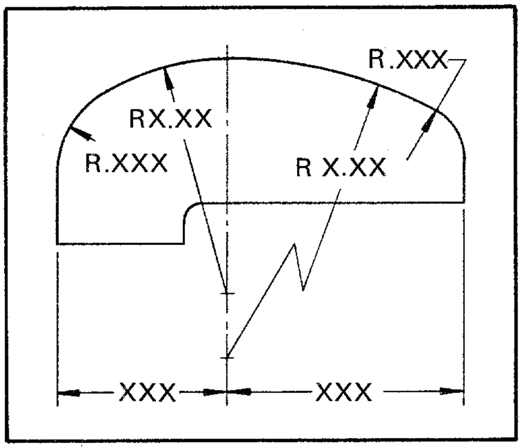

RADII OUTLINE
FIGURE 5-39

5.6.1.14 Irregular Outlines (curves & not radii). Irregular outlines are dimensioned by coordinates or offset method. See FIGURES 5-40 and 5-41.

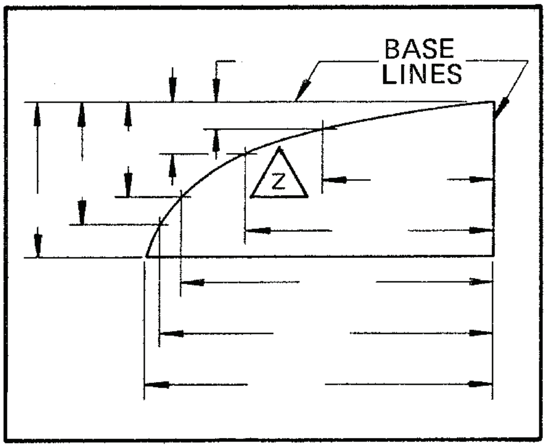

COORDINATE OR OFFSET OUTLINE
FIGURE 5-40

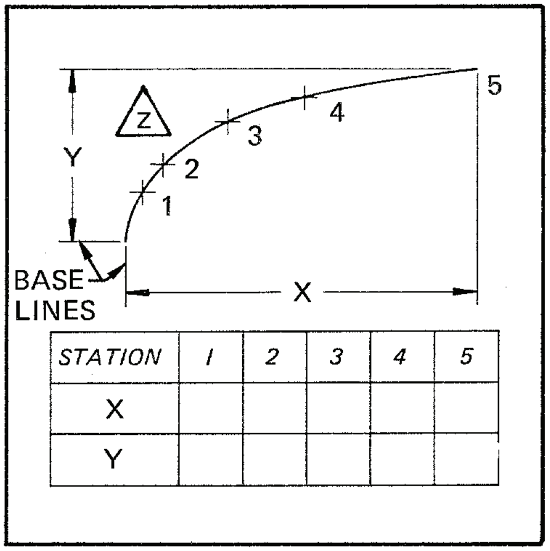

STATION	1	2	3	4	5
X					
Y					

TABULATED OUTLINE
FIGURE 5-41

Z BLEND AS NECESSARY TO PRODUCE A SMOOTH AND CONTINUOUS CONTOUR BETWEEN ESTABLISHED POINTS.

Notes such as NOTE Z above may seem like they provide adequate definition of allowable variation and limits of acceptability for a feature, but such a note is actually quite ambiguous. "BLEND AS NECESSARY" is subjective; exactly what does it mean, and what constitutes being adequately blended? These are, of course, unanswerable questions. A more rigorous approach is to completely define the surface (true profile) using basic dimensions and use a profile of a surface tolerance to control the allowable deviation. Or better yet, the best method to define a complex contour as shown in FIGURES 5-40 and 5-41 is to define the surface using a 3D CAD solid model, define the CAD model geometry as basic dimensions, and to apply a profile of a surface tolerance to the model-defined geometry. Additionally, unit-basis profile tolerancing may be added to further refine and quantify the local "blending" required within the larger profile tolerance zone. See SECTION 26 of the DRM for more information.

5.6.1.15 Arcs (Radii), Chords And Angles Dimensioning. The dimensioning of arcs, chords and angles shall be shown as applicable in FIGURE 5-42. The arc symbol "⌒" appears above the dimension.

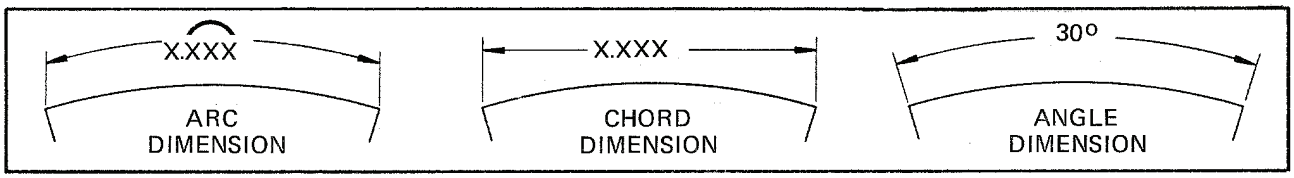

DIMENSIONING ARCS, CHORDS AND ANGLES
FIGURE 5-42

5.6.1.16 Dimensioning Spherical Radii. Spherical radii are dimensioned as shown in FIGURE 5-43. The symbol "SR" precedes the radius dimension.

5.6.1.17 Dimensioning Spherical Diameter. Spherical diameters are dimensioned as shown in FIGURE 5-44. The symbol "S" precedes the diameter symbol and dimension value.

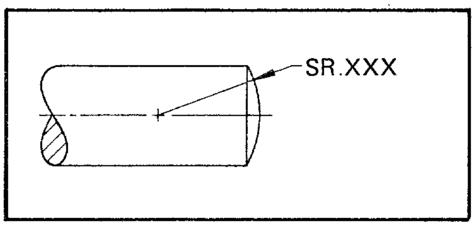

SPHERICAL RADIUS
FIGURE 5-43

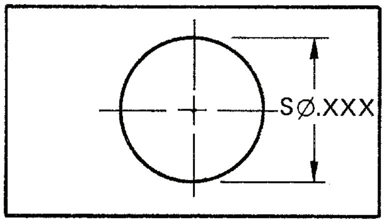

SPHERICAL DIAMETER
FIGURE 5-44

5.6.2 Diametrical Dimension Symbol For All External And Internal Features.

5.6.2.1 Identification Of Diametrical Dimensions By Symbol. In all views, diametrical dimensions shall be specified by the symbol "Ø" preceding the diameter dimension. Where the diameters of a number of concentric cylindrical features are specified, such diameters should be dimensioned in a longitudinal (side) view. See FIGURE 5-45.

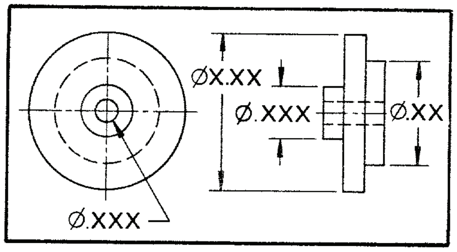

DIAMETERS
FIGURE 5-45

5.6.2.2 Holes. Holes are dimensioned in the view where they appear as circles whenever practical. See FIGURE 5-46.

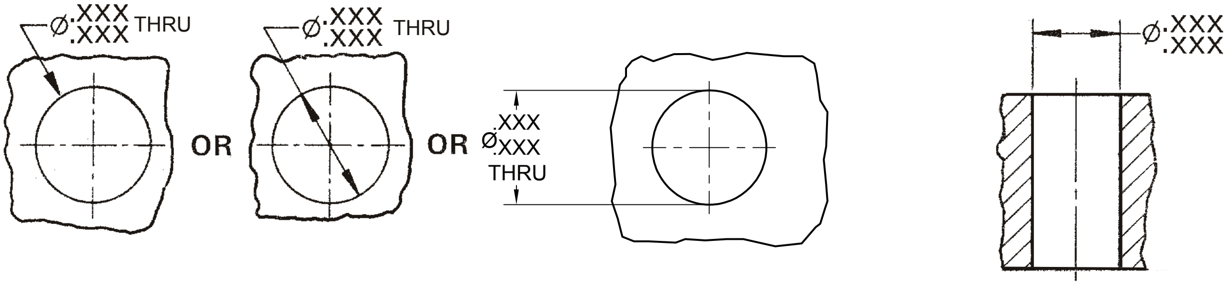

FIRST CHOICE SECOND CHOICE

ROUND HOLE DIMENSIONING
FIGURE 5-46

5.6.2.2.1 Depth Of Holes. Dimension the depth of holes as shown in FIGURE 5-47. Through holes are either defined by picture or the term "THRU" when only a top view is provided.

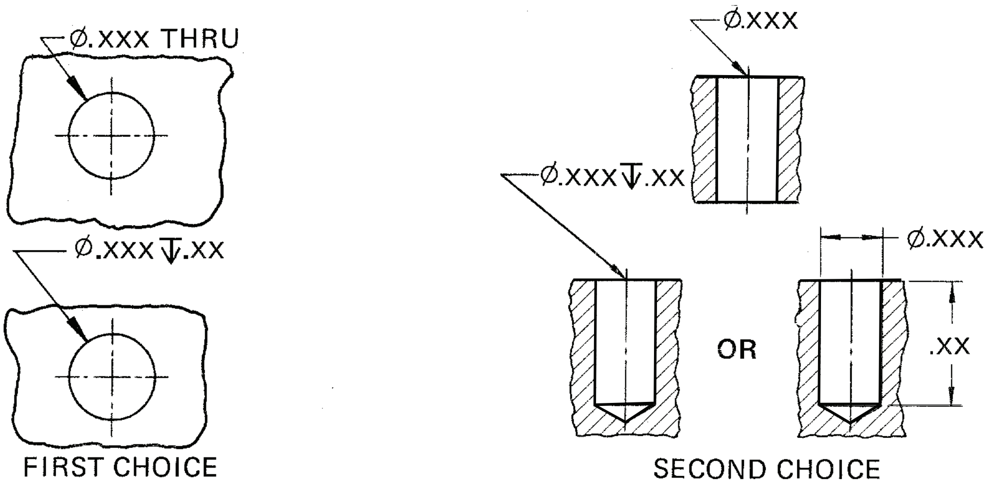

HOLE DEPTH DIMENSIONING
FIGURE 5-47

5.6.2.3 Slotted Holes. The end radii of slotted holes are indicated but not dimensioned. See FIGURE 5-48.

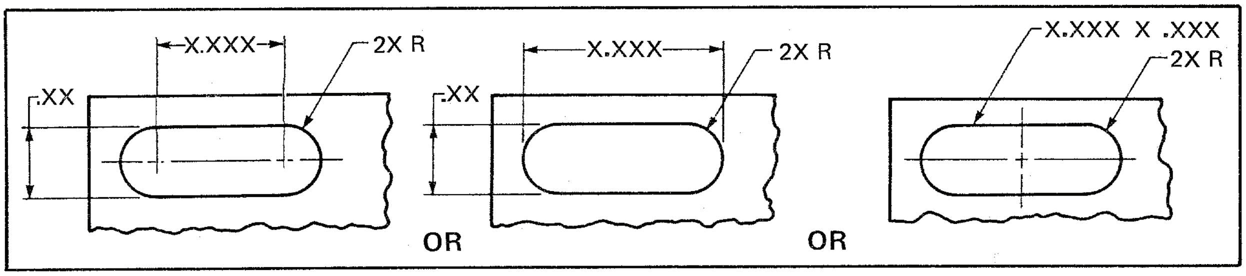

SLOTTED HOLE DIMENSIONING
FIGURE 5-48

5.6.2.4 Counterbored Hole Symbol. Counterbored holes are specified by note or by dimensioning as shown in FIGURE 5-49a. Where the thickness of the remaining material is important, the thickness rather than the depth is dimensioned as shown in FIGURE 5-49b. Also shown are holes having more than one counterbore as shown in FIGURE 5-49c.

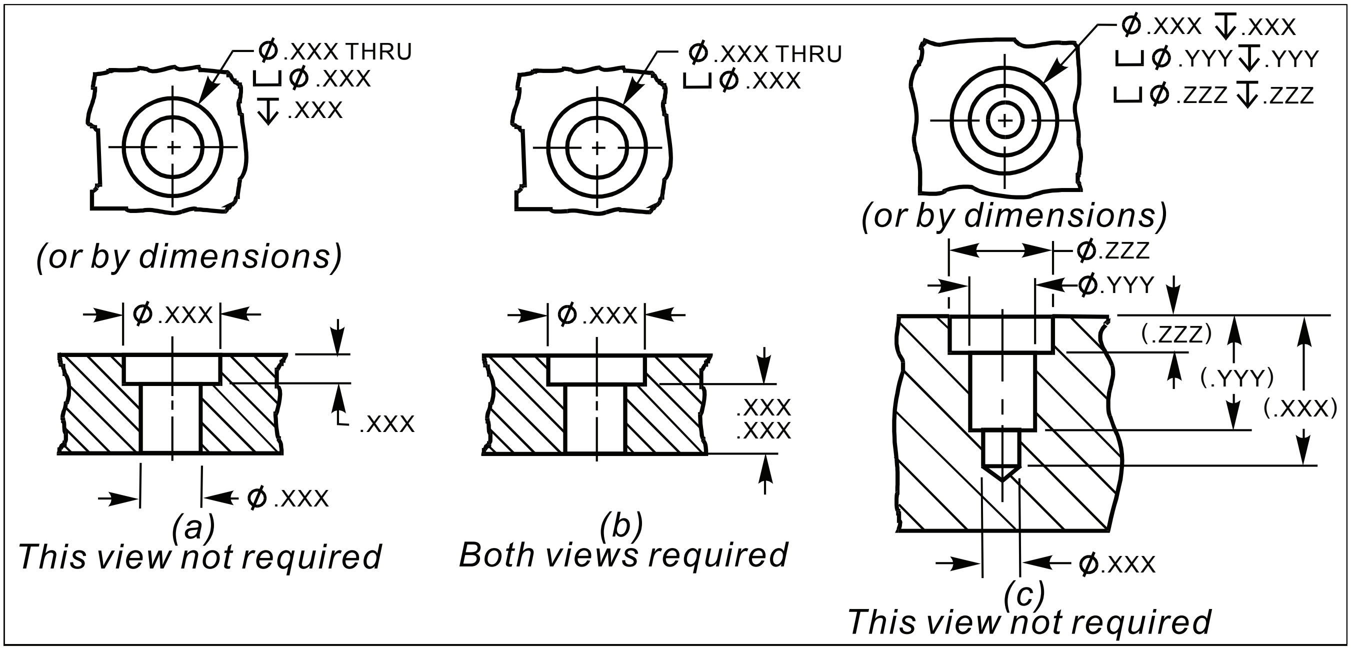

COUNTERBORED DIMENSIONING
FIGURE 5-49

WHERE: XXX = DIM; ∅= DIA; X = MULTIPLE TIMES; ⌴= SPOTFACE; ↧ = DEEP

5.6.2.5 Spotface Symbol. Spotfacing is the operation of cleaning up the surface around a feature. The diameter of the spotface is specified. The depth or the remaining thickness may be specified, otherwise, minimum depth necessary to clean up the surface is understood. See FIGURE 5-50.

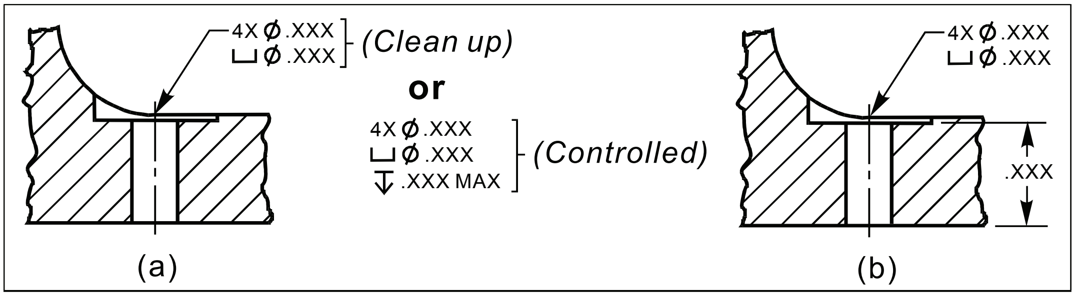

SPOT FACE DIMENSIONING
FIGURE 5-50

5.6.2.6 Countersunk And Counter Drilled Hole Symbols. The diameter and included angle for the countersink are specified for countersunk holes. See FIGURE 5-51a. For counter drilled holes, the diameter and depth of the counter drill are specified. See FIGURE 5-51b. Specifying the included angle of the counter drill is optional. The depth of the drill and counter drill is measured from the outer surface of the part to the depth of the full diameter.

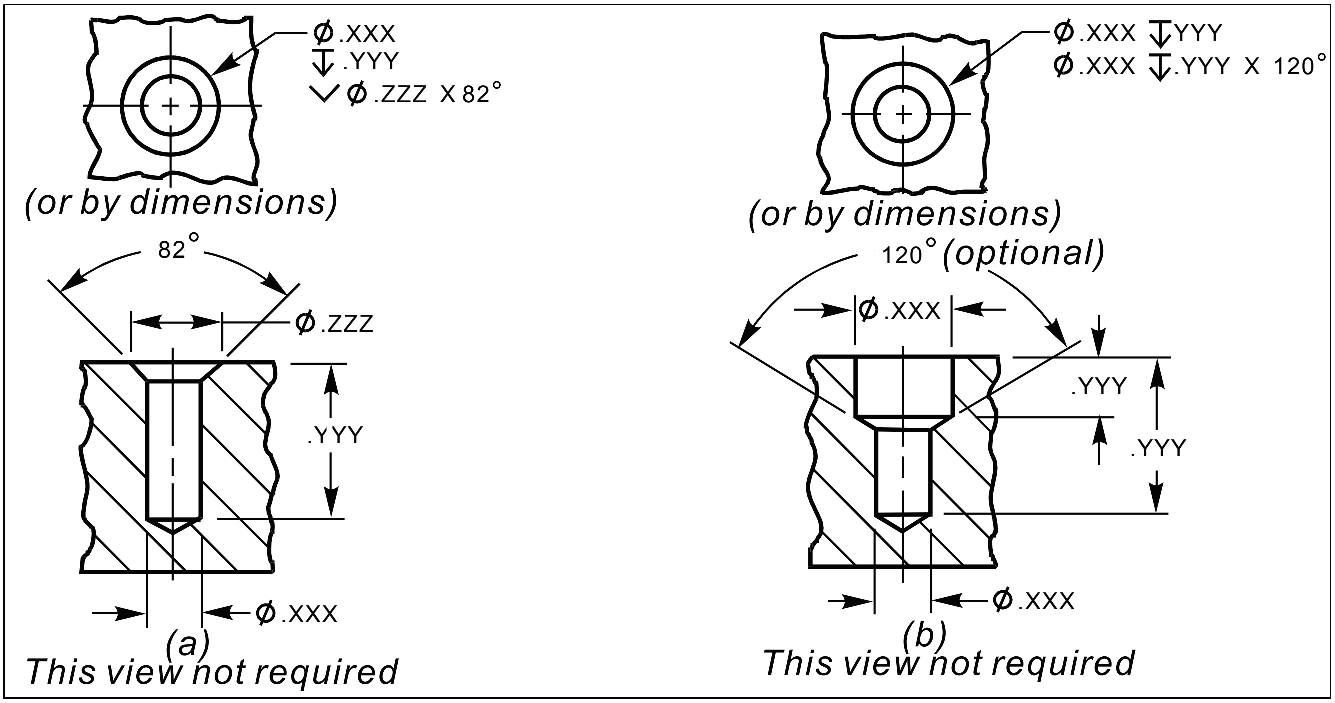

FLAT SURFACE COUNTERSUNK AND COUNTER DRILLED DIMENSIONING
FIGURE 5-51

5.6.2.6.1 Dimensioning A Countersunk Hole On A Curved Surface (Concave or Convex). Whenever the countersunk hole is made on a curved surface, the diameter specified on the drawing applies at the minor diameter of the resulting ellipse. See FIGURE 5-52.

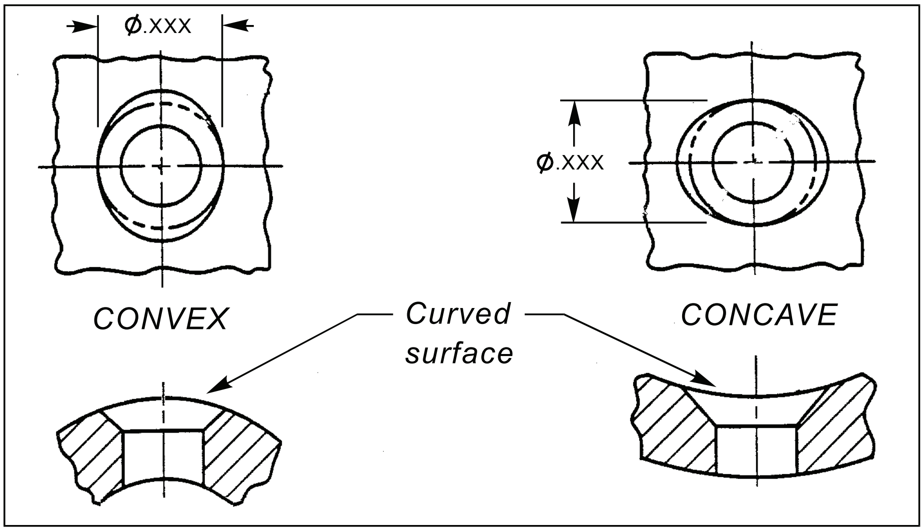

COUNTERSUNK DIMENSIONING ON CURVED SURFACE
FIGURE 5-52

5.6.3 Square Shape Symbol. Square shapes may be dimensioned as shown in FIGURE 5-53. This symbol is not to be used for square areas.

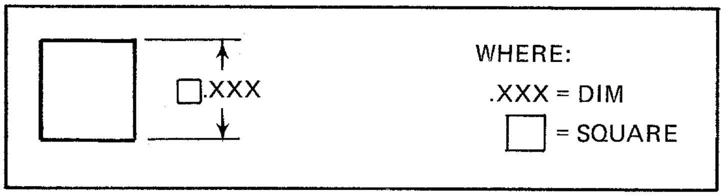

SQUARE SHAPE DIMENSIONING
FIGURE 5-53

5.6.4 Stock Size. When the stock size is specified in the parts list and used as furnished, it shall be indicated on the field of the drawing by the word "STOCK". When two stock dimensions are used and the orientation is not obvious from the picture, the dimensions shall be included in the callout. See FIGURE 5-54. The foregoing does not apply for shapes such as I-beams, channels, etc., where it is obvious that the shape is used as furnished. Stock tolerances shall be established by existing commercial standards, or Military (MIL) standards and Federal (FED) specifications.

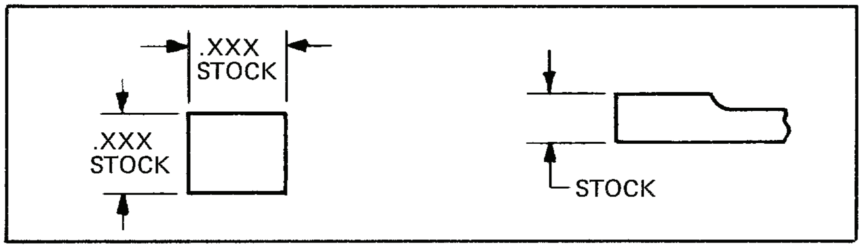

STOCK SIZE DIMENSIONING
FIGURE 5-54

5.6.5 Chamfers. Chamfers of forty-five degree angles are called out by one of the methods shown in FIGURE 5-55. The note method is used only with 45° chamfers.

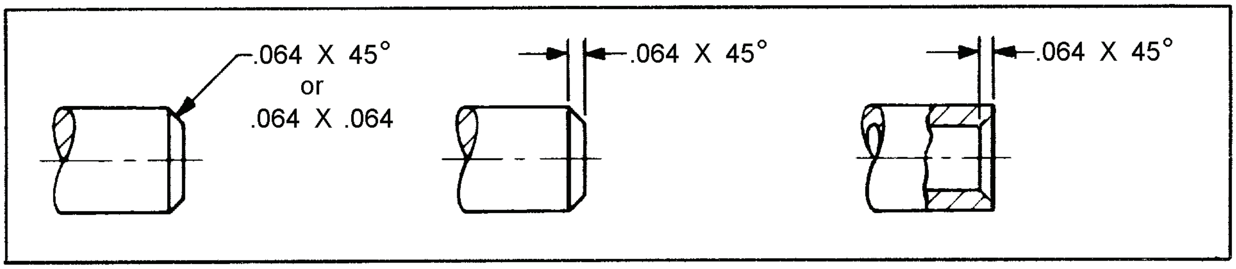

INCH	METRIC
.064	1.63

45° CHAMFER DIMENSIONING
FIGURE 5-55

5.6.5.1 Dimensioning Chamfers Other Than 45°. Chamfers of other angles are directly dimensioned by one of the methods shown in FIGURE 5-56.

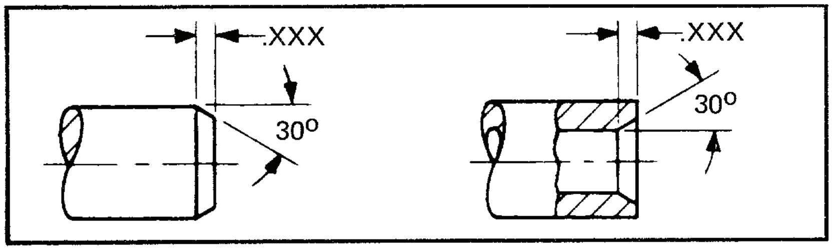

CHAMFERS OTHER THAN 45°
FIGURE 5-56

5.6.5.2 Dimensioning Non-Right Angle Chamfers. When chamfers are required for surfaces intersecting at other than right angles, the methods shown in FIGURE 5-57 are used.

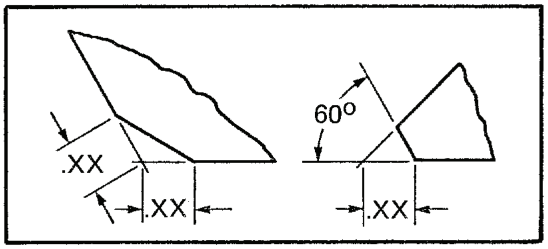

CHAMFERS BETWEEN SURFACES AT OTHER THAN 90°
FIGURE 5-57

5.6.5.3 Dimensioning Chamfers Requiring Control. When the chamfer requires control, the methods shown in FIGURE 5-58a are used. The same dimensional control may also be applied to the chamfer diameter on a shaft. See FIGURE 5-58b.

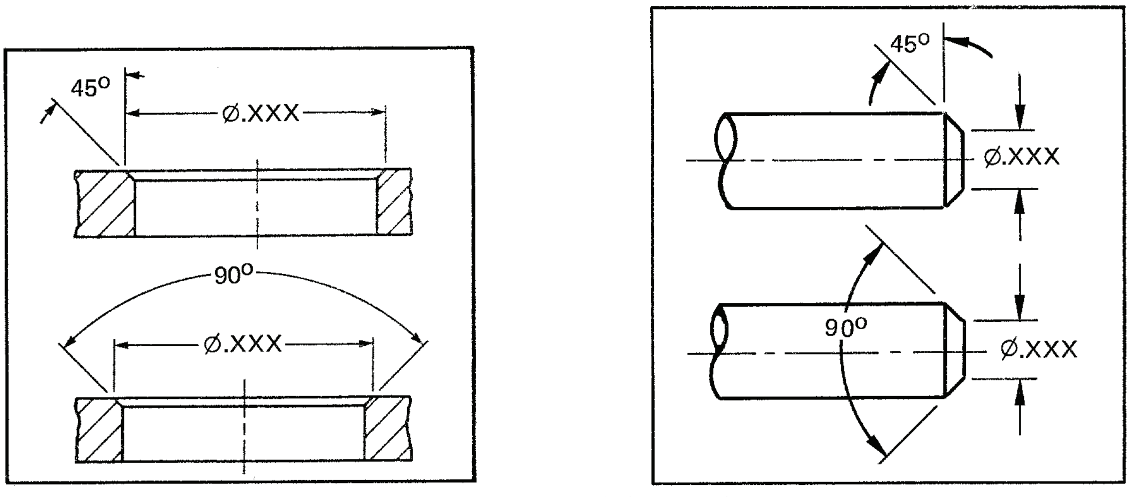

CONTROLLING INTERNAL CHAMFERS
(a)

CONTROLLING EXTERNAL CHAMFERS
(b)

FIGURE 5-58

5.6.6 Symmetrical Outline Symbol. The symmetrical outline symbol (see TABLE 5-9) is used when drawing space is limited and only one-half of the symmetrical shape can be conveniently shown or when quantities of like features are specified for an entire view. See FIGURE 5-59. (Previous symbols were ℄ and ℄.) Note: See the warning following PARAGRAPH 5.5.7.6.

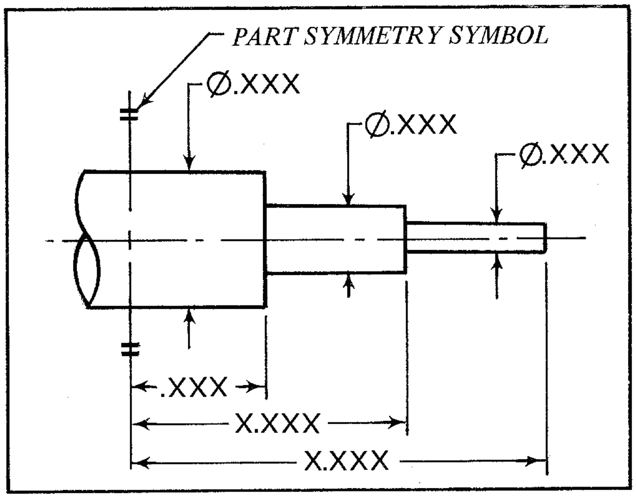

SYMMETRICAL OUTLINE
FIGURE 5-59

5.6.7 Keyways and Keyseats. Keyways and keyseats are dimensioned by width, depth and location. See FIGURES 5-60a, b & c. The depth is dimensioned from the opposite side of the shaft or hole. Use of GD&T for keyways and keyseats is preferred.

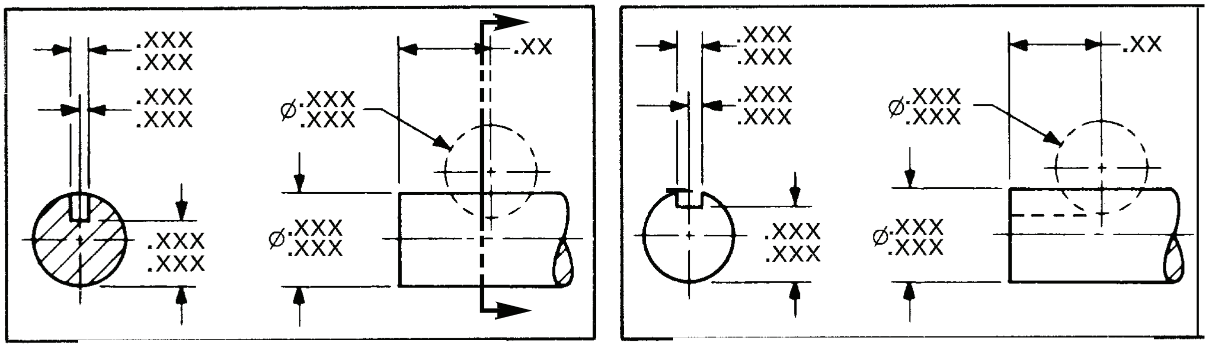

(a) WOODRUFF KEYSEATS (b) KEYWAY FOR STOCK KEYS

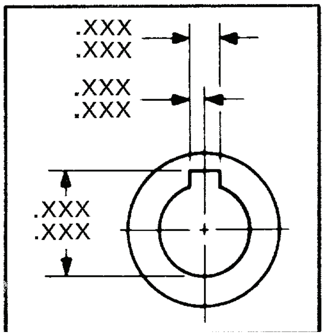

(c) KEYWAY FOR STOCK KEYS (INTERNAL)
FIGURE 5-60

5.6.8 Knurls. Knurls are dimensioned in accordance with ASME B94.6 and are used to provide a rough surface for gripping, decoration, or for a press fit between mating parts. Types of knurls are diamond, straight and diagonal. Standard pitches are 64, 96, 128 and 160.

5.6.8.1 Decorative Knurls. Knurls for gripping or decorative purposes are called out by type, pitch, and axial length. See FIGURE 5-61. This is a Class I tolerance in accordance with ASME B94.6 and may be applied to straight, diagonal and raised diamond knurling.

5.6.8.2 Decorative And Functional Knurls. For applications requiring closer dimensional control of the knurled outside diameter than provided by CLASS I tolerances. This is a CLASS II tolerance in accordance with ASME B94.6 and applies to straight knurling only.

5.6.8.3 Functional Knurls. Knurls for press fits are called out by type, pitch, axial length, diameter before knurling, and should include the minimum diameter after knurling. See FIGURE 5-62. This is a Class III tolerance in accordance with ASME B94.6 and applies to straight knurling only.

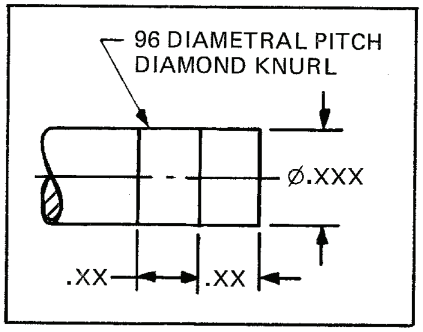

CLASS I
KNURL FOR DECORATION OR GRIPPING
FIGURE 5-61

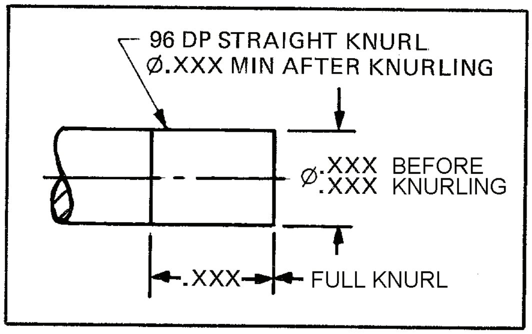

CLASS II and CLASSIII
KNURL FOR PRESS FIT
FIGURE 5-62

(SEE ASME B94.6 FFOR BEFORE AND AFTER DIMENSIONS)

5.6.9 Conical Taper Symbol. Conical tapers may be dimensioned and toleranced by several methods depending on the accuracy required. Conical tapers include standard machine tapers classified as American Standard Self-Holding and Steep Taper Series per ASME B5.10. American Standard machine tapers are dimensioned by specifying the taper name and number. The diameter at the gage and the length may also be specified. The taper in inches per foot and the diameter of the small end may be shown as a reference dimension “( )”. See FIGURE 5-63 and PARAGRAPH 5.3.15.

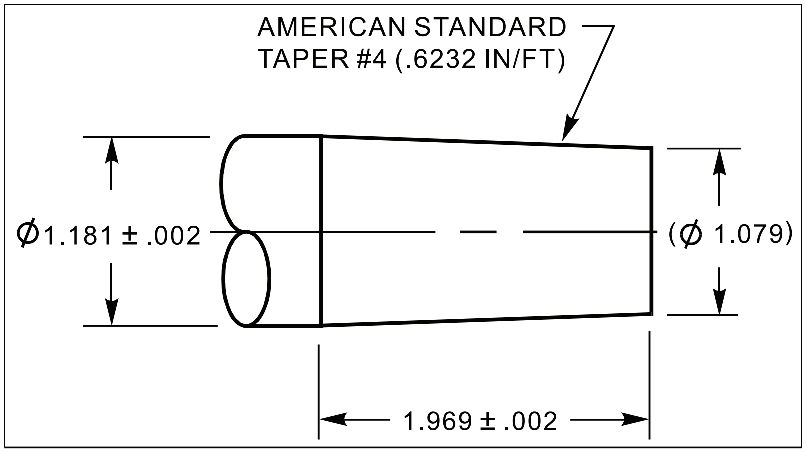

AMERICAN STANDARD TAPER
FIGURE 5-63

5.6.9.1 Non-Critical Taper Dimensioning. If the angle of the taper is non-critical, dimension as shown in FIGURE 5-64. The angle of the taper may be shown as a reference dimension for helpful information.

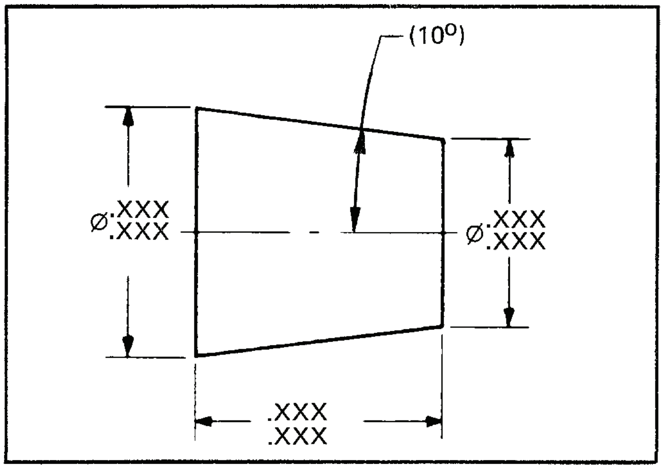

DIMENSIONING CONICAL TAPERS WITH TOLERANCED DIAMETERS & TOLERANCED LENGTH
FIGURE 5-64

5.6.9.2 Critical Taper Dimensioning. If the angle of the taper is critical, dimension as shown in FIGURE 5-65 specifying a tolerance on the taper.

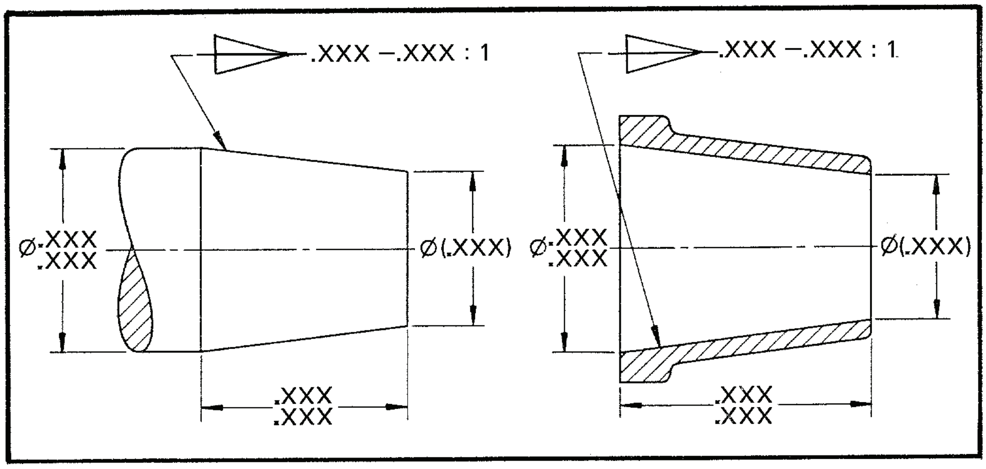

DIMENSIONING CONICAL TAPERS BY SPECIFYING A TOLERANCE ON THE TAPER

FIGURE 5-65

5.6.9.3 Taper Dimensioning When Radial Tolerance Zone Is Critical. If the radial tolerance zone of the taper is critical, dimension as shown in FIGURE 5-66 specifying a basic taper.

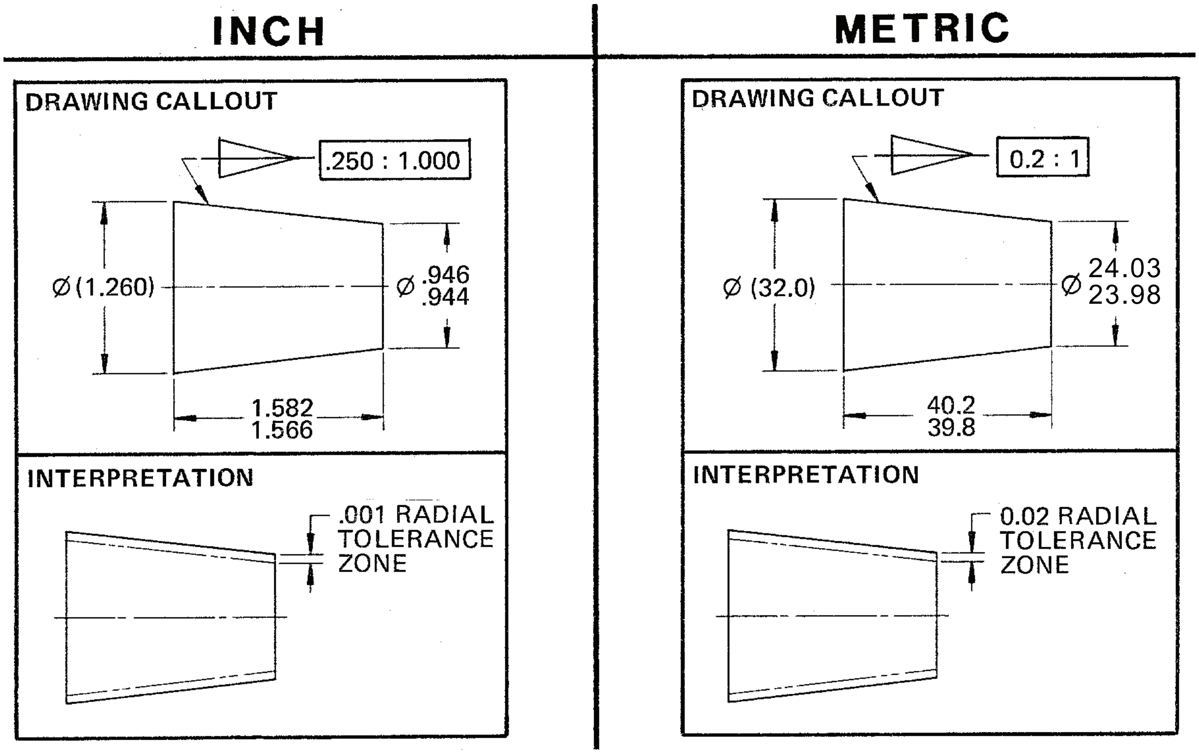

NOTE: ANY VARIATION MUST FALL WITHIN A TOLERANCE ZONE CREATED BY THE MAXIMUM AND MINIMUM LIMITS OF THE END DIAMETERS.

DIMENSIONING A CONICAL TAPER BY SPECIFYING A BASIC TAPER

FIGURE 5-66

5.6.9.4 Taper Dimensioning Using Basic Diameter And Conical Taper Method. A basic taper symbol precedes the taper ratio control frame. The basic diameter is an exact dimension which must be located within specified limits. This diameter method of dimensioning tapers illustrated in FIGURE 5-67 controls the size of the tapered section, as well as its axial position in relation to some other surface. As is shown in the interpretation of FIGURE 5-67, the tolerance on the location of the basic diameter not only controls the axial position of the tapered section, but also sets up a tolerance zone within the form of the taper must fall. The taper may vary from the value given, but must fall within the zone created by the location tolerances.

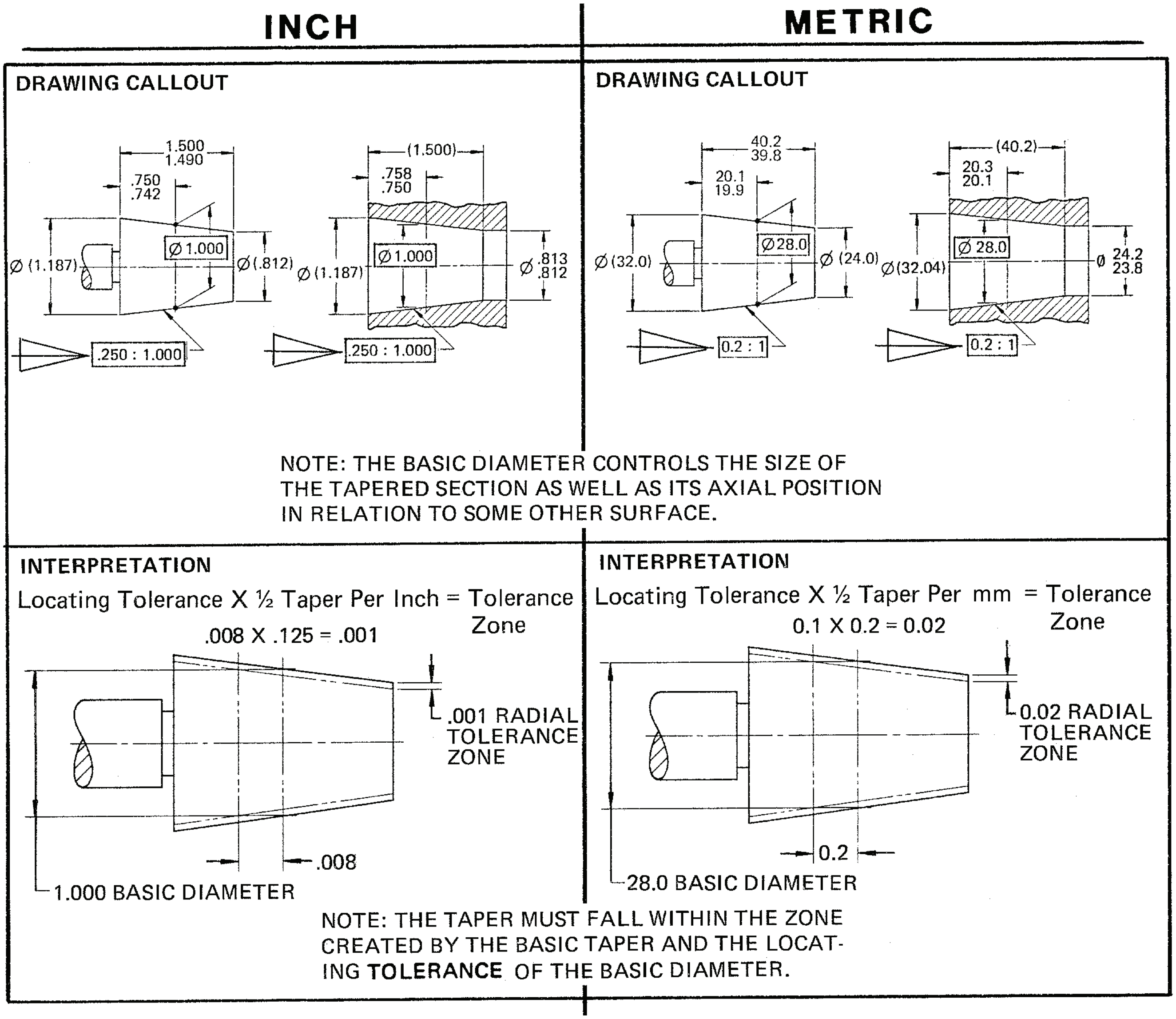

NOTE: THE BASIC DIAMETER CONTROLS THE SIZE OF THE TAPERED SECTION AS WELL AS ITS AXIAL POSITION IN RELATION TO SOME OTHER SURFACE.

Locating Tolerance X ½ Taper Per Inch = Tolerance Zone
.008 X .125 = .001

Locating Tolerance X ½ Taper Per mm = Tolerance Zone
0.1 X 0.2 = 0.02

NOTE: THE TAPER MUST FALL WITHIN THE ZONE CREATED BY THE BASIC TAPER AND THE LOCATING **TOLERANCE** OF THE BASIC DIAMETER.

DIMENSIONING CONICAL TAPERS BY SPECIFYING A BASIC TAPER AND BASIC DIAMETER
FIGURE 5-67

5.6.9.5 Taper Dimensioning Whenever The Taper Is Extremely Slight. Whenever the taper is extremely slight, a basic location is specified as shown in FIGURE 5-68, and the tolerance is applied directly to the diameter at that location.

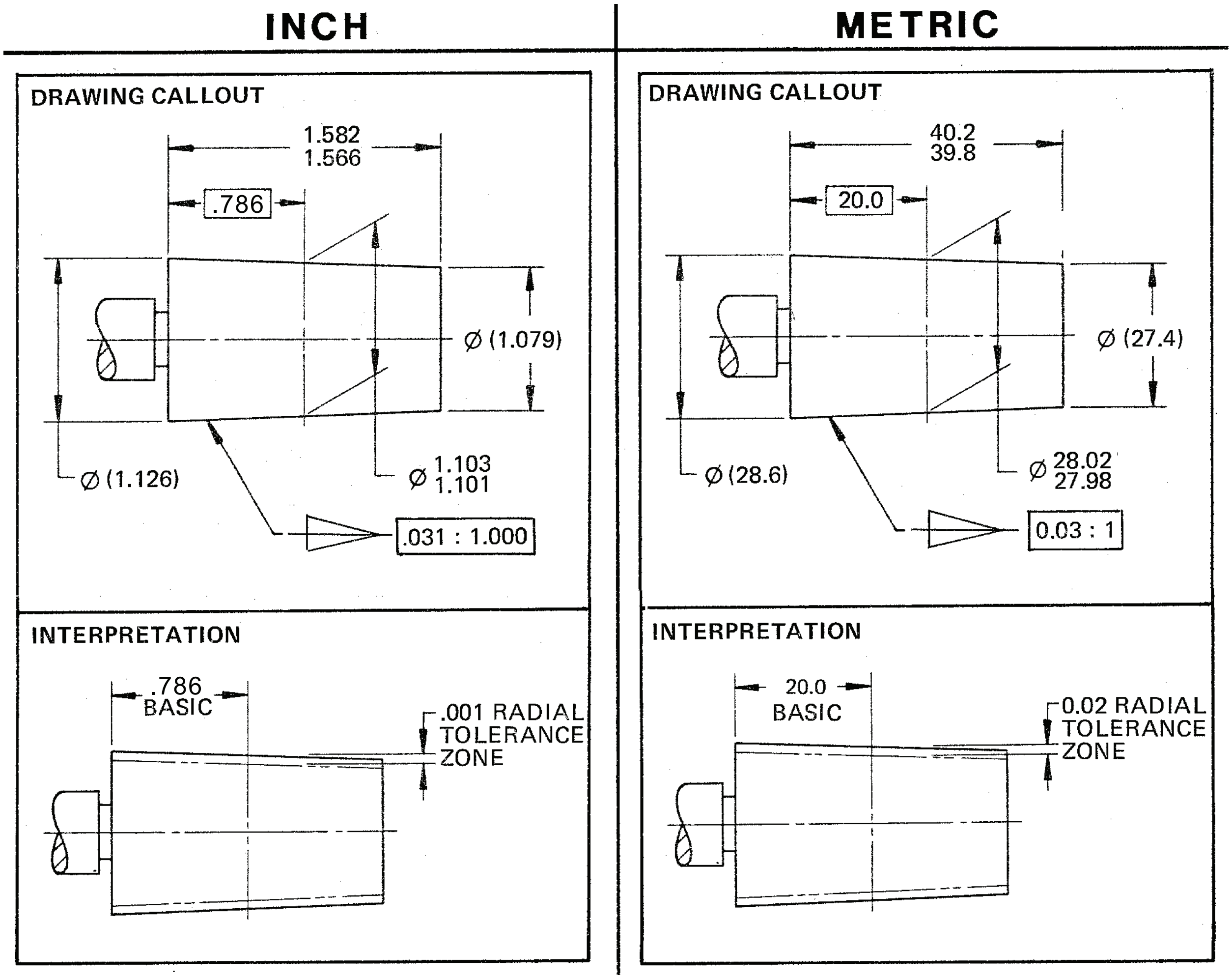

DIMENSIONING CONICAL TAPER BY SPECIFYING BASIC TAPER AND BASIC LENGTH
FIGURE 5-68

5.6.10 Flat Taper Symbol Flat tapers are dimensioned as shown in FIGURE 5-69 and PARAGRAPH 5.3.16.

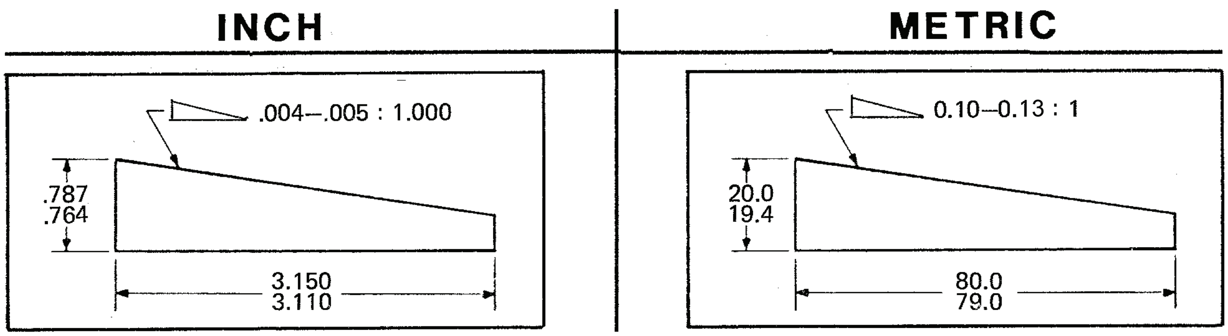

DIMENSIONING A FLAT TAPER
FIGURE 5-69

5.6.11 Dimensioning Of Tubes. Tubes are dimensioned as illustrated in SECTION 4 (Tube Drawing).

5.6.12 Origin Symbol. The dimension origin symbol establishes the origin from which dimensions are taken between parallel surfaces. See FIGURE 5-70.

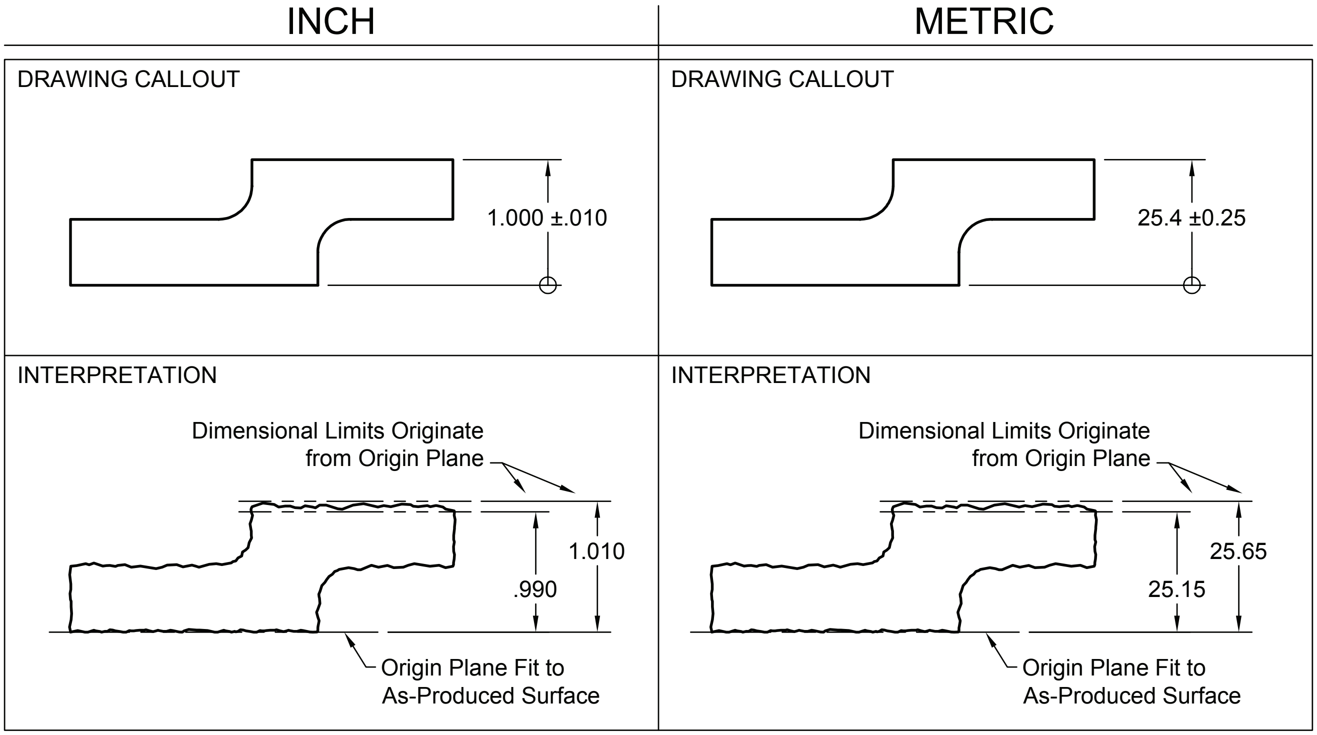

DIMENSION ORIGIN SYMBOL
FIGURE 5-70

5.6.13 Repetitive Features And Dimensions. Repetitive features by the use of notes or dimensions are shown in FIGURE 5-71.

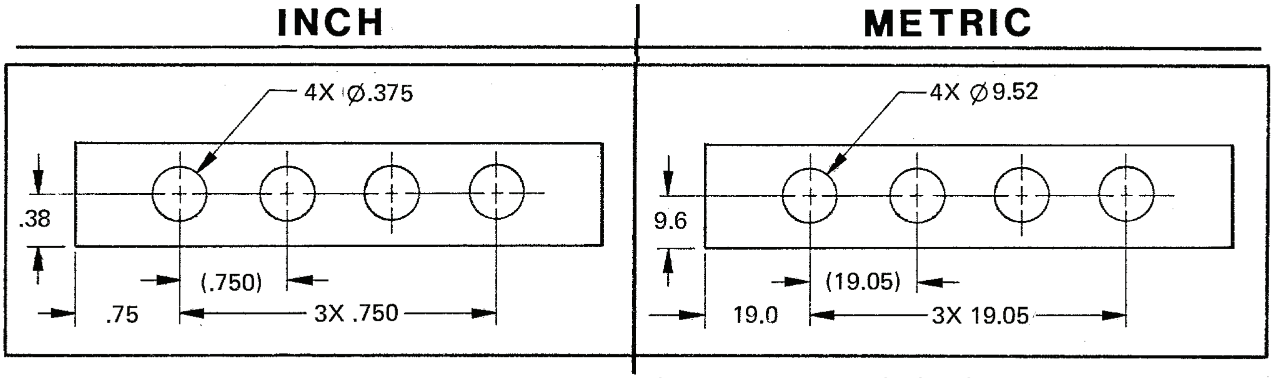

REPETITIVE FEATURES AND DIMENSIONS
FIGURE 5-71

5.6.14 Statistical Size Tolerance Symbol. When the tolerance is a statistical size tolerance, the statistical tolerance symbol is placed adjacent to the size dimension. See FIGURE 5-72.

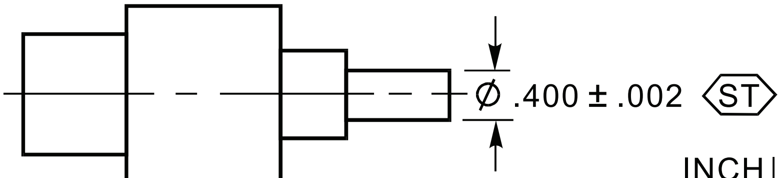

INCH	METRIC
.002	0.05
.400	10.16

A general note such as the following may be placed on the drawing:

FEATURES IDENTIFIED AS STATISTICALLY TOLERANCED ⟨ST⟩ SHALL BE PRODUCED WITH STATISTICAL PROCESS CONTROLS.

STATISTICAL SIZE TOLERANCING CONTROL USED
FIGURE 5-72

5.6.14.1 Statistical Size Limits and the Arithmetic Stacking Limits. When the dimension has the possibility of being produced without Statistical Process Control (SPC), the arithmetic static limits may also be shown. See FIGURE 5-73.

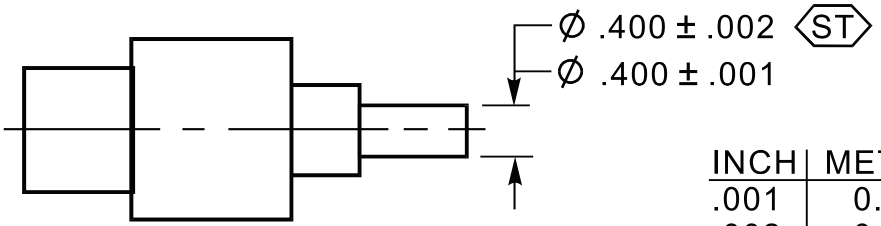

INCH	METRIC
.001	0.02
.002	0.05
.400	10.16

A general note such as the following may be placed on the drawing:

FEATURES IDENTIFIED AS STATISTICALLY TOLERANCED ⟨ST⟩ SHALL BE PRODUCED WITH STATISTICAL PROCESS CONTROLS, OR TO THE MORE RESTRICTIVE ARITHMETIC LIMITS.

BOTH STATISTICAL AND ARITHMETIC SIZE TOLERANCING CONTROL USED
FIGURE 5-73

5.6.15 Statistical Geometric Tolerancing. When the tolerance is a statistical geometric tolerance, the symbol is placed in or adjacent to the feature control frame following the stated tolerance and any modifier. See FIGURE 5-74.

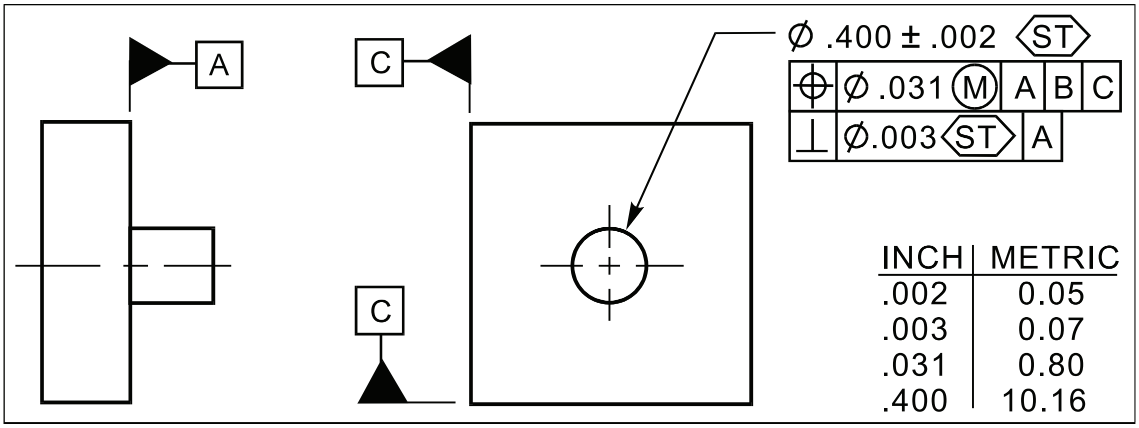

INCH	METRIC
.002	0.05
.003	0.07
.031	0.80
.400	10.16

STATISTICAL GEOMETRIC TOLERANCING CONTROL
FIGURE 5-74

5.6.16 Limited Segment Tolerance Symbol. The between symbol is the symbolic means of indicating that a tolerance applies to a limited segment of a surface between designated extremities. In FIGURE 5-75, the tolerance applies only between point **D** and **E**.

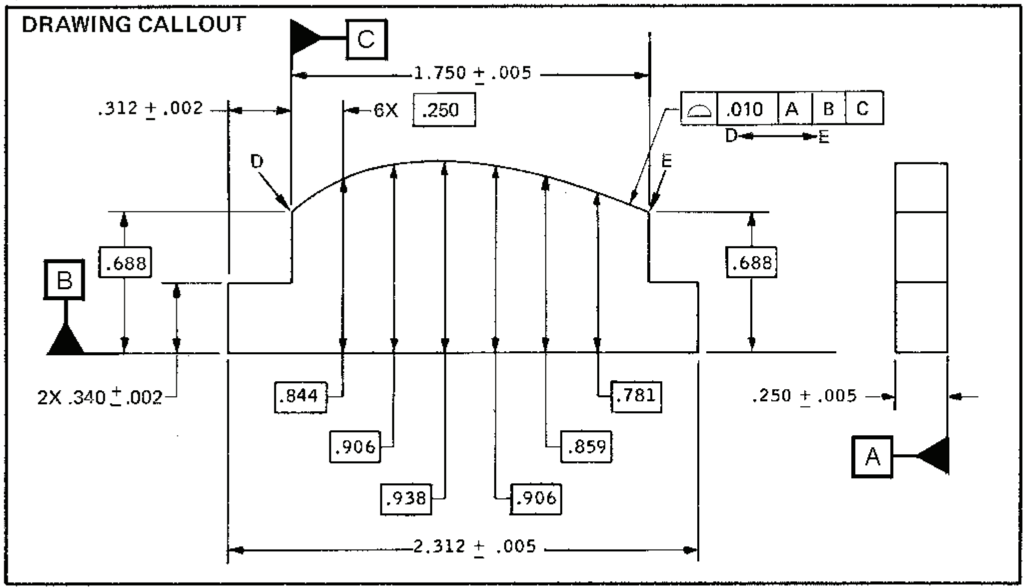

INCH	METRIC
.002	0.05
.005	0.13
.010	0.25
.250	6.35
.312	7.92
.340	8.64
.688	17.48
.781	19.84
.844	21.44
.859	21.82
.906	23.01
.938	23.83
1.750	44.45
2.312	58.72

LIMITED SEGMENT TOLERANCING CONTROL
FIGURE 5-75

5.6.17 Referencing of a Dimension or Other Dimensional Data Symbol. Unless otherwise specified, the symbolic means of indicating a dimension or other dimensional data as reference is by enclosing the dimension (or dimensional data) within parentheses. See FIGURE 5-76. In written notes, parentheses retain their grammatical interpretation. Note: The abbreviation REF may also be used if company practice dictates, is allowed by a company or corporate standard, or for other compelling reasons. The method used to indicate reference dimensions should be consistent across all drawings for any given project.

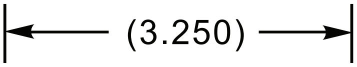

REFERENCE DIMENSION SYMBOL
FIGURE 5-76

5.6.18 Repetitive Features or Dimension Symbol. Repetitive dimensions may be specified by the use of an upper case "X" preceded by a numeral to indicate the "number of times" or "places" required. See Figures 5-78 and 5-80. The same applies to features such as holes, slots and equal spacing. A character space is used between the "X" (number of times) and the dimension feature.

e.g. 6XØ250 THRU

5.6.19 The Use of "X" to Indicate "By". An upper case "X" may be used as a symbol to indicate "by" between coordinate dimensions as shown in FIGURES 5-48 and 5-55. A character space shall precede and follow the "X".

e.g. .064 X 45°

5.6.20 All Around Symbol. The symbol used to indicate a tolerance or a function that is applied all around the part or surface. See TABLE 5-9 and FIGURE 5-123.

e.g.

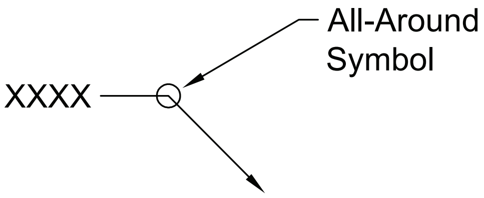

5.7 LOCATING HOLES.

5.7.1 Locating Holes Using Polar/Rectangular Coordinate Dimensioning Methods. FIGURES 5-77 thru 5-81 illustrate the positioning of round holes by giving distances, or distances and directions, to the hole centers. These methods can also be used to locate round pins and other features of symmetrical contour. Allowable variations for any of the positioning dimensions may be specified by giving a tolerance with each distance or angle, or by "positional tolerancing dimensioning" explained in PARAGRAPH 5.15.

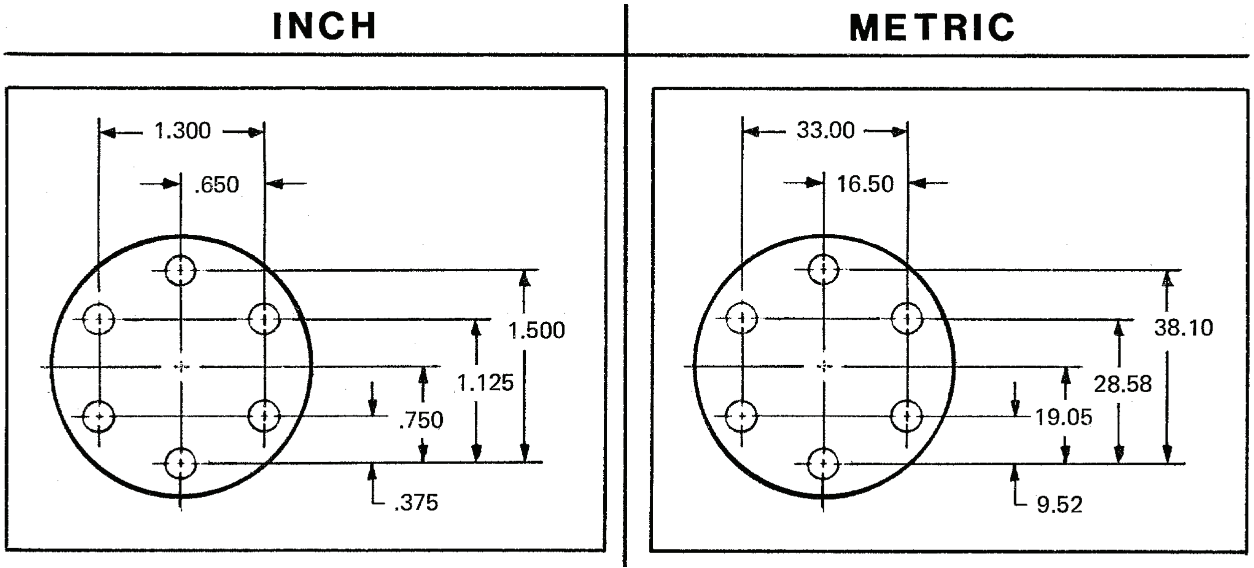

HOLE LOCATION BY RECTANGULAR COORDINATES
FIGURE 5-77

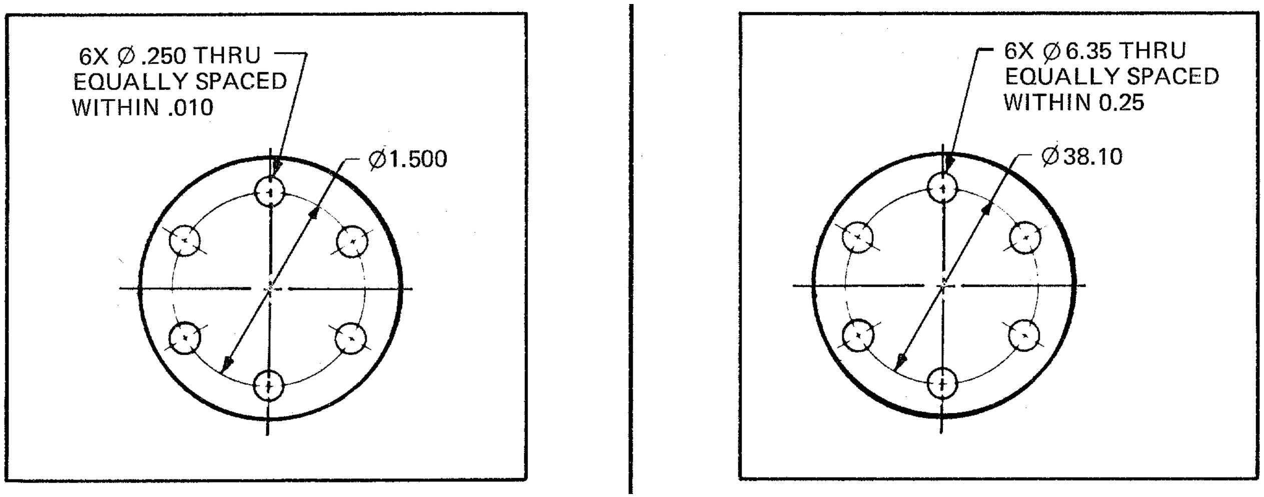

HOLE LOCATION BY POLAR RECTANGULAR COORDINATES
USING DIAMETER AND EQUALLY SPACED
FIGURE 5-78

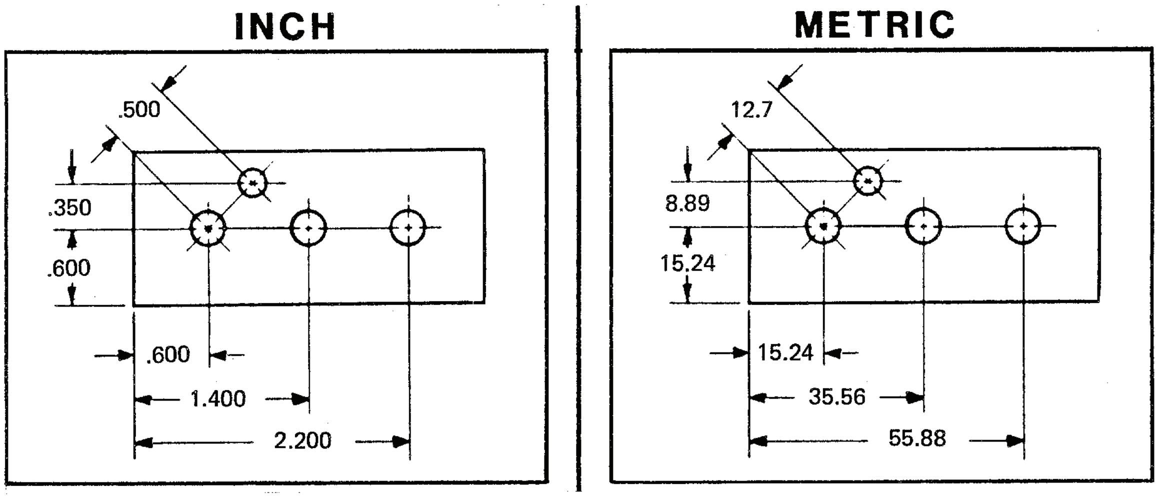

HOLE LOCATION BY LINEAR DISTANCE
FIGURE 5-79

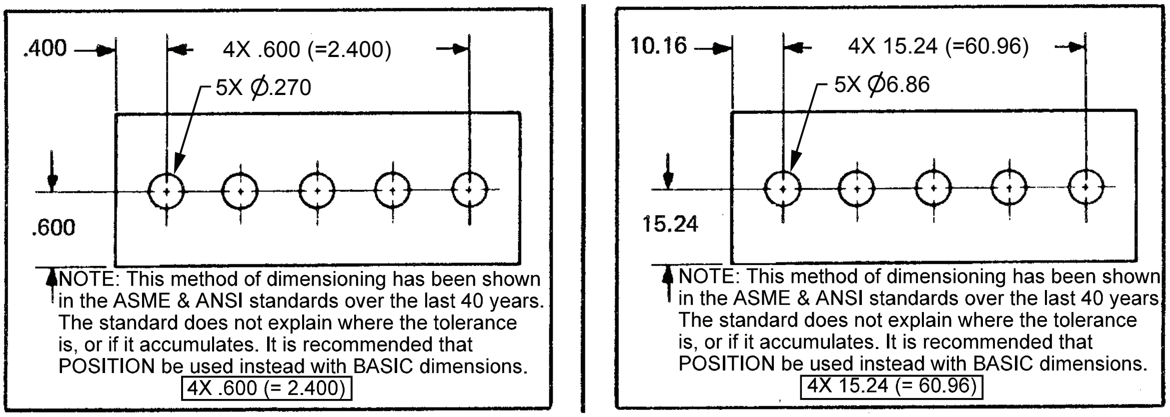

NOTE: This method of dimensioning has been shown in the ASME & ANSI standards over the last 40 years. The standard does not explain where the tolerance is, or if it accumulates. It is recommended that POSITION be used instead with BASIC dimensions. $\boxed{\text{4X .600 (= 2.400)}}$

NOTE: This method of dimensioning has been shown in the ASME & ANSI standards over the last 40 years. The standard does not explain where the tolerance is, or if it accumulates. It is recommended that POSITION be used instead with BASIC dimensions. $\boxed{\text{4X 15.24 (= 60.96)}}$

HOLE LOCATION EQUALLY SPACED
FIGURE 5-80

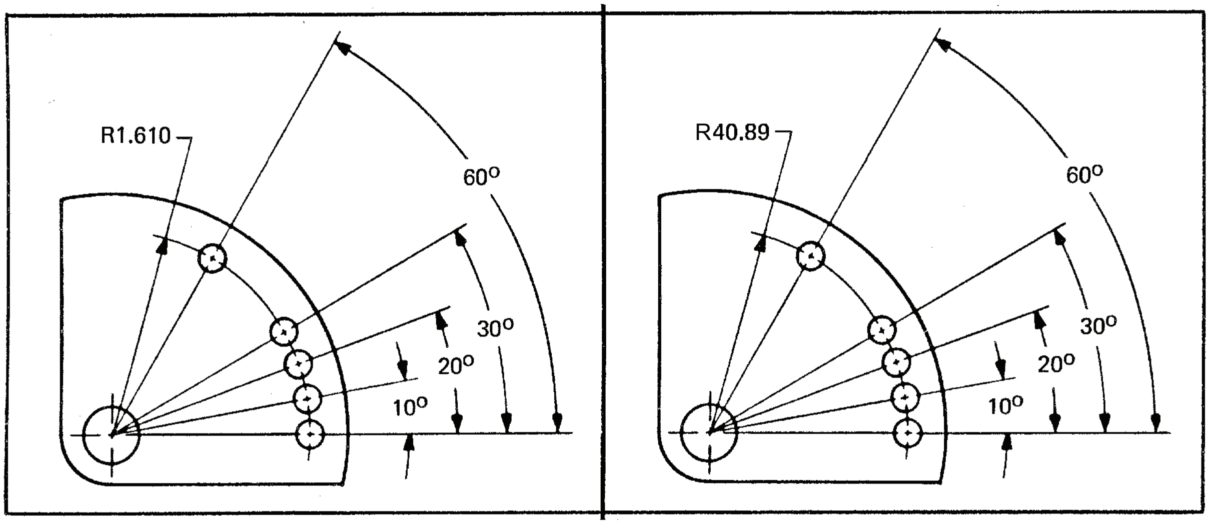

HOLE LOCATION BY RADIUS AND ANGLE
FIGURE 5-81

5.7.2 Locating Features Using Polar/Coordinate Dimensioning Method Without Using Dimension Lines. Dimensions may be shown on extension lines without the use of dimension lines or arrowheads. See FIGURE 5-22. When base lines are indicated as zero coordinates, they shall be labeled as X, Y, and Z. See FIGURE 5-82.

Note: This method should be used with basic dimensions and positional tolerances related to a datum reference frame to ensure that the dimensioning and tolerancing specifications are unambiguous and only have one meaning.

5.7.3 Locating Features Using Polar/Coordinate Dimensioning Method in Which Dimensions Are Listed in a Table. Dimensions from mutually perpendicular planes are listed in a table on the drawing rather than by pictorial method. This method is generally used on drawings whenever a large number of similar shaped figures need to be located. Tables need only to satisfy the reduction of dimensional extension lines or clutter See FIGURE 5-82.

Note: This method should be used with basic dimensions and positional tolerances related to a datum reference frame to ensure that the dimensioning and tolerancing specifications are unambiguous and only have one meaning.

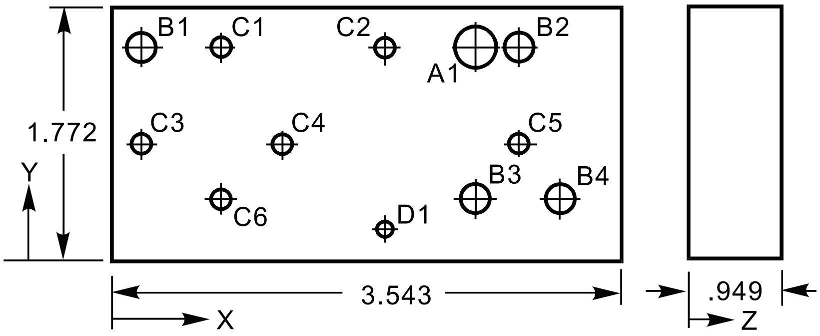

HOLE	DESCRIPTION	QTY
A	Ø.250	1
B	Ø.188	4
C	Ø.141	6
D	Ø.125	1

HOLE	FROM	X	Y	Z
A1	X,Y	2.500	1.500	.703
B1	X,Y	.188	1.500	THRU
B2	X,Y	2.835	1.500	THRU
B3	X,Y	2.517	.438	THRU
B4	X,Y	3.110	.438	THRU
C1	X,Y	.750	1.500	THRU
C2	X,Y	1.890	1.500	THRU
C3	X,Y	.188	.828	THRU
C4	X,Y	1.181	.828	THRU
C5	X,Y	2.835	.828	THRU
C6	X,Y	.750	.438	THRU
D1	X,Y	1.890	.236	.469

INCH	METRIC
.125	3.18
.141	3.58
.188	4.78
.236	6.00
.250	6.35
.438	11.13
.469	11.91
.703	17.86
.750	19.05
.828	21.03
.949	24.10

INCH	METRIC
1.181	30.00
1.500	38.10
1.772	45.00
1.890	48.00
2.500	63.50
2.517	63.93
2.835	72.00
3.110	79.00
3.543	90.00

RECTANGULAR COORDINATE DIMENSIONING IN TABULAR FORM
FIGURE 5-82

5.8 DIMENSIONING METHODS AFFECTING TOLERANCE ACCUMULATION.

5.8.1 Effect On Tolerance Values Of Selected Method Of Dimensioning. Three methods of dimensioning the same object can result in different tolerance values. The method selected must relate to the function the object is intended to perform.

5.8.1.1 Chain Dimensioning. The maximum overall tolerance between two features is equal to the sum of the tolerances on the intermediate distances. This method results in the greatest tolerance accumulation between the surfaces X and Y. See FIGURE 5-83a.

5.8.1.2 Base Line Dimensioning. The maximum overall tolerance between two features is equal to the sum of the tolerances on the two dimensions from their origin to the features. This method results in a reduction of the tolerance accumulation between surfaces X and Y. See FIGURE 5-83b.

5.8.1.3 Direct Dimensioning. The maximum overall tolerance between two features is equal to the single tolerance between the origin and the feature. This method results in the least tolerance. See FIGURE 5-83c.

5.8.1.4 At Assembly Dimensioning. Whenever locating holes at assembly is required because alignment of the holes is critical between two or more parts (particularly rivet holes, for close fit between rivet and hole), the holes are made through all parts at assembly. Each part drawing will clearly show holes at their location and a note, e.g. "LOCATE HOLES WITH (PART NO.) AT ASSEMBLY". The assembly drawing shall specify the dimensions locating the holes.

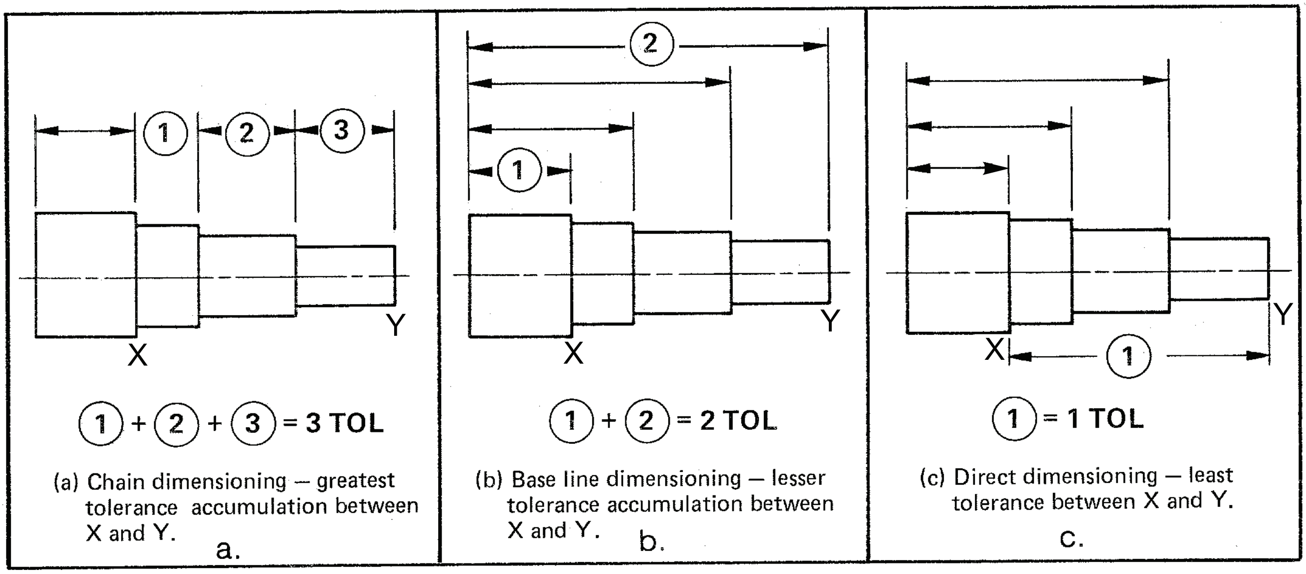

(a) Chain dimensioning — greatest tolerance accumulation between X and Y. a.

(b) Base line dimensioning — lesser tolerance accumulation between X and Y. b.

(c) Direct dimensioning — least tolerance between X and Y. c.

TOLERANCE ACCUMULATION
FIGURE 5-83

5.9 DIMENSIONING RELATED TO A SPECIFIC ORIGIN.

5.9.1 Selection Of Proper Origin. Whenever a dimension between two features would result in a greater tolerance than is permitted if the wrong origin were selected, the origin is identified as shown in FIGURE 5-84. Also see FIGURE 5-70 for more information.

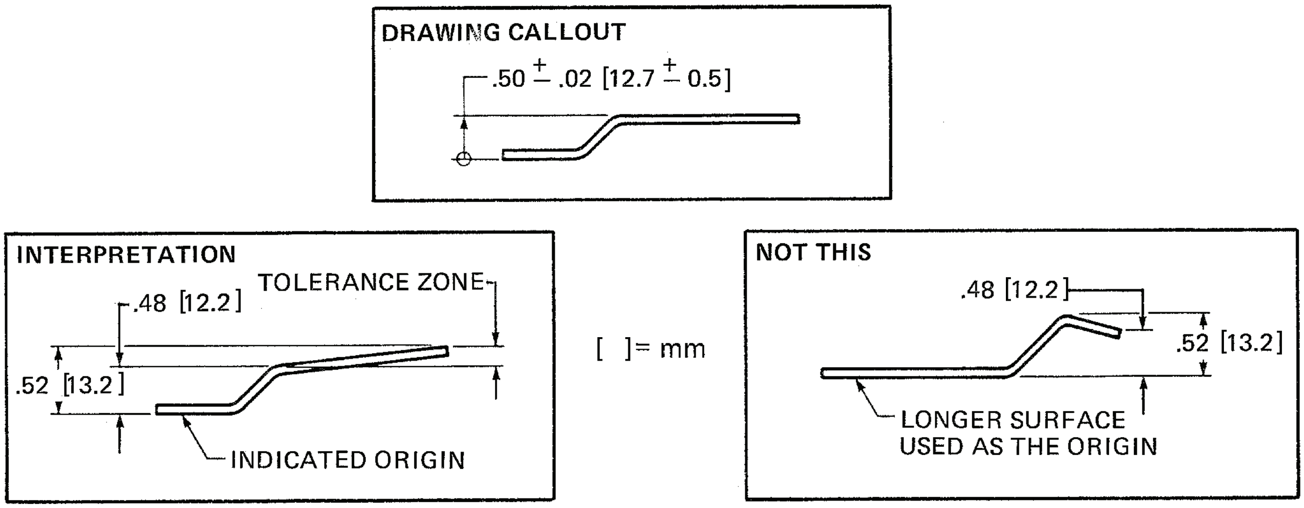

DIMENSION FROM DESIGNATED ORIGIN
FIGURE 5-84

5.10 GENERAL RULES AND INTERPRETATIONS OF DIMENSIONS AND TOLERANCES OF FORM.

5.10.1 Rule #1: Limits Of Size And Form. The size limits for a feature of size, control the allowable variation in form as well as the size. See the following explanation:

a. No element of the as-produced feature of size (including a datum feature of size) shall extend beyond the envelope of perfect form at MMC. This envelope is the true form implied by the drawing.

and

b. The measured distance between opposed points of the as-produced feature of size at any cross-section shall not be less than the LMC limit of size of an external feature of size nor greater than the LMC limit of size of an internal feature of size.

Note: Rule #1 above prescribing an envelope of perfect form at MMC applies only to individual features of size and not to the interrelationship between features. Such interrelationship should be controlled by geometric tolerances specified on the drawing or annotated model. FIGURE 5-85 illustrates the extreme variations of form that are permitted by this interpretation.

5.10.1 (Continued)

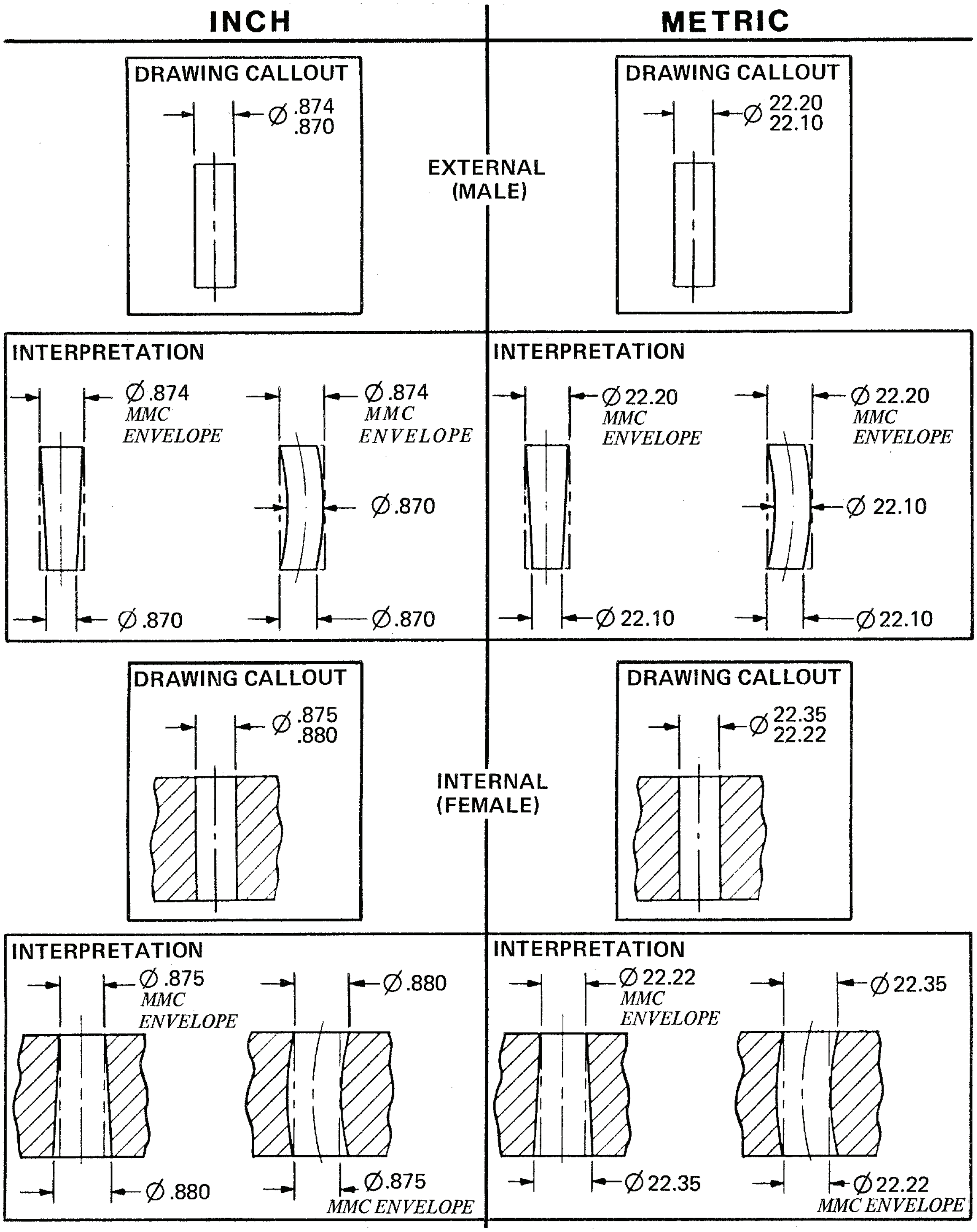

EXTREME VARIATIONS OF FORM ALLOWED BY SIZE TOLERANCES
FIGURE 5-85

5.10.1.1 Exceptions To Rule #1.

a. Rule #1 does not apply to "stock" material such as bars, sheets, tubing, etc. These "stock" materials are controlled by the material specification called out on the drawing or by industry standards for the material when called out as commercial grade.

b. Where it is desirable to permit a tolerance of form to exceed the envelope of perfect form at MMC, the suitable form tolerance and a local note or flagnote which states "PERFECT FORM NOT REQUIRED AT MMC" may be added to the drawing. The note is applied to the pertinent size dimension(s). When this is done, the form tolerance specified is allowed even though the feature is at its MMC. When this procedure is used, the MMC size of the mating part must be revised (external feature decreased), (internal feature increased) by an amount at least equal to the form tolerance.

c. Parts subject to free state variation in the unrestrained condition (non-rigid part).

5.10.2 Rule #2: RFS is the Default Condition (Unless Otherwise Specified). RFS applies, with respect to the individual tolerance, datum feature reference, or both where no material condition modifier is specified. MMC or LMC must be specified on the drawing where required.

EXAMPLES:

NOW	WAS
(All Geometric Tolerances) ASME Y14.5M -1994	(Positional Tolerance Only) ANSI Y14.5M -1982 ANSI Y14.5 -1973

Note: Circular runout, total runout, concentricity, and symmetry are only applicable on an RFS basis and cannot be specified on an MMC or LMC basis.

5.10.3 Rule #2a: Alternate Practice for Positional Tolerances

Rule #2a allows the RFS symbol to be used in a feature control frame with respect to the individual tolerance, datum feature reference, or both, as applicable. The practice is recommended for revising must drawings prepared to older versions of the Y14.5 standard. New drawings should concur with ASME Y14.5M -1994.

EXAMPLE:

5.10.3 Rule #3 : All Other Geometric Tolerances (Except Position)

Rule #3 has been deleted in ASME Y14.5M-1994. RFS applies, with respect to the individual tolerance, datum reference, or both, where no modifying symbol is specified; MMC or LMC

be specified on the drawing where required for features of size.

EXAMPLE:

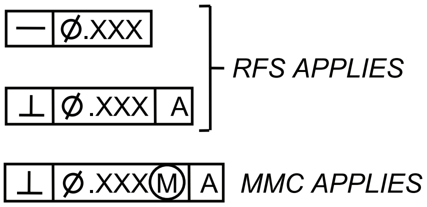

5.10.4 Rules Applicable To Threads, Gears And Splines. The following rules are applicable to all symbols and notes specifying tolerances of form or position involving screw threads, gears, or splines as toleranced features or datums.

5.10.4.1 Screw Threads. Where tolerances of orientation or position are expressed by symbols and notes, each such tolerance applicable to a screw thread and each datum feature reference to a screw thread shall be understood to apply to the axis of the thread derived from the pitch cylinder. See EXAMPLE a. If design requirements necessitate an exception to this general rule, a note to that effect shall supplement the specification, e.g., MAJOR DIA or MINOR DIA. In the case of symbol application, the qualifying notation shall be shown beneath or adjacent to the feature control frame where applicable to the feature, see EXAMPLE b., and beneath or adjacent to the datum feature symbol where applicable to the datum. See EXAMPLE c.

EXAMPLES:

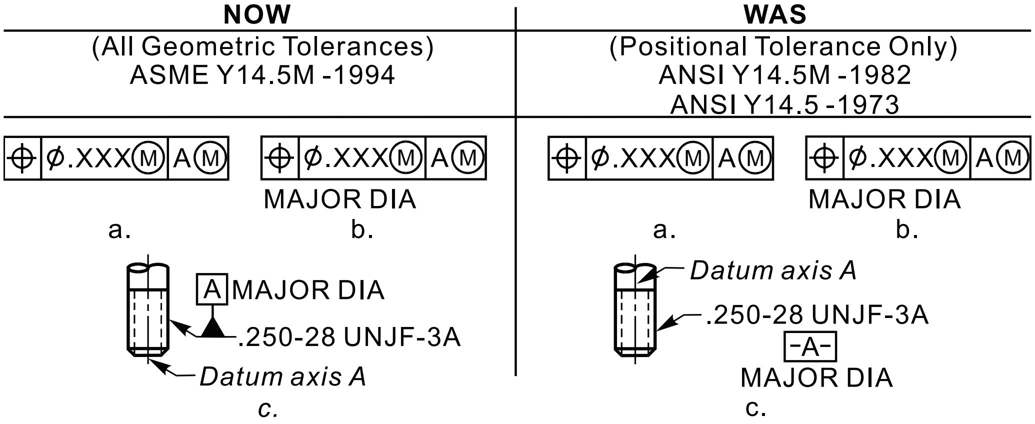

5.10.4.2 Gears And Splines. For gears and splines, a qualifying notation must be added to the symbol or note, e.g., MAJOR DIA, MINOR DIA, PITCH DIA. This designation is stated beneath the feature control frame or beneath the datum feature symbol, as applicable.

EXAMPLE:

NOW	WAS
(All Geometric Tolerances) ASME Y14.5M - 1994	(Positional Tolerance Only) ANSI Y14.5M - 1982
⌖ Ø.XXX A PITCH DIA	⌖ Ø.XXX Ⓢ A Ⓢ PITCH DIA

5.10.5 Rules Applicable To Datum Features. Datum features or origins must be identified on a drawing (See PARAGRAPH 5.11.5), but in either case the following rules apply:

NOW	WAS
ASME Y14.5M - 1994 ANSI Y14.5M - 1982	ANSI Y14.5 - 1973
DATUMS FEATURES MUST BE SPECIFIED	DATUMS MAY BE IMPLIED

5.10.5.1 Accuracy Of Datum Features. A true measurement is only theoretical and can only be made from a simulated true geometric counterpart by associated processing equipment such as machine tables and surface plates. While these simulated planes are not true planes, they are of such quality that they are used to simulate datums from which measurements are taken. Magnification of these planes will show irregularities and contact is made with the simulated datum at a number of surface extremities or high points. The number of surface extremities contacted will be determined by the desired order of precedence in selecting datums.

5.10.5.2 Dimensioning Parts With Plane Surface Datum Features. When features are related to a datum reference frame by geometric tolerances, they are oriented and located with respect to the datum reference frame, not with respect to the datum features. See FIGURE 5-86. When a plane surface is used to establish a datum plane, measurements to other features are taken from the datum plane fit to the datum feature and not from the actual datum feature surface. Thus, a geometric tolerance that references a datum feature does not include any variation which may exist in the datum feature.

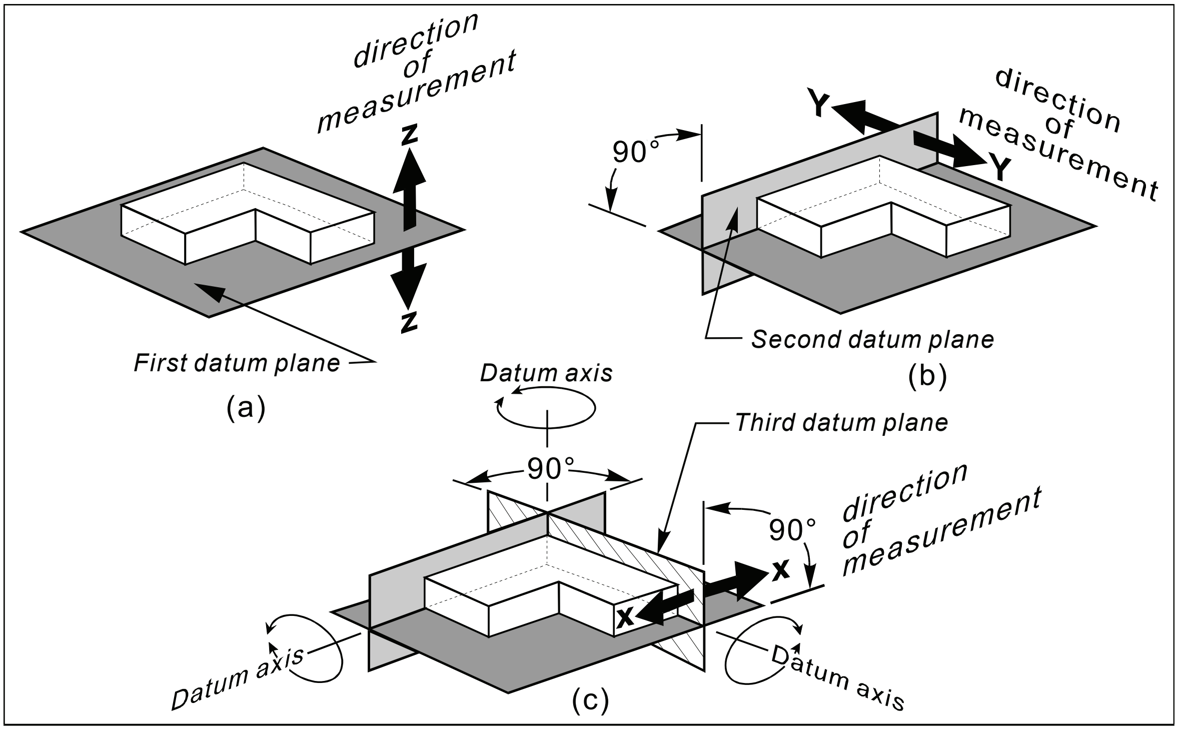

SEQUENCE OF DATUM FEATURES RELATES WORKPIECE TO DATUM REFERENCE FRAME
FIGURE 5-86

5.10.5.3 Identification Of Datum Features. Features to be used as datum features must be identified with a datum feature symbol. The datum feature symbol consists of a letter (or letters) in a frame, attached to a line and a triangle. See FIGURES 5-89 – 5-92. A datum feature on an actual part must be accessible during manufacture so that measurements from its associated datum can be readily made. Also, corresponding features on mating parts must be used as datum features to ensure assembly and facilitate tool and fixture design. Datum feature symbols shall not be applied to centerlines, center planes or axes. Also, datum feature symbols should not be used to identify features on which datum targets have been used to establish a datum. For example, if datum target points A1, A2, and A3 have been specified on a surface, that surface should not be labeled as datum feature A using a datum feature symbol. This practice may lead to confusion, as the datum targets signify that only a three points on the surface are to be used to establish a datum, while the datum feature symbol indicates that the entire feature is to be used to establish a datum. Such contradictory specifications must be avoided.

5.10.5.4 Specifying Datum Features by Order of Precedence. Datum features are specified in an order of precedence to properly relate a part or assembly to a datum reference frame. The order of precedence is indicated by entering the selected datum feature letters from left to right in the feature control frame. They need not be in alphabetical order. They should be entered in the order of functional importance.

EXAMPLE:

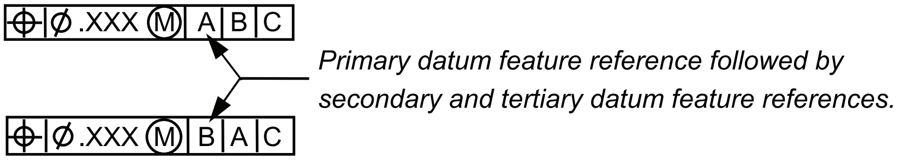

Primary datum feature reference followed by secondary and tertiary datum feature references.

5.10.5.5 Relating a Part to a Simple Datum Reference Frame. Where a planar surface has been selected as a primary datum feature, a minimum of three (3) high points on the surface of the part contact the primary datum plane, which may be simulated by a surface plate or other high-precision planar surface. See FIGURE 5-86(a). The part is then further related to the datum reference frame by having a minimum of two (2) high points of the secondary datum feature contact the secondary datum plane, which may be simulated by high-precision planar surface at 90º to the primary datum. See FIGURE 5-86(b). Final relation to the datum reference frame requires a minimum of one (1) high point on the tertiary datum feature to contact the tertiary datum plane, which may be simulated by high-precision planar surface at 90º to the primary and secondary datums. See FIGURE 5-86(c). (Note: Devices such as a coordinate measuring machine often do not use the "high points" to simulate a datum feature; instead, some sort of fitting algorithm is used, thus, a different datum is established.)

5.10.5.6 Dimensioning Parts With Cylindrical Datum Features. Two theoretical exact planes intersecting at right angles are the datum axes of a cylindrical datum feature (part). These axes are always associated with cylindrical datum feature. These axes serve as the origin of measurement from which other features of the part are located. See FIGURE 5-87.

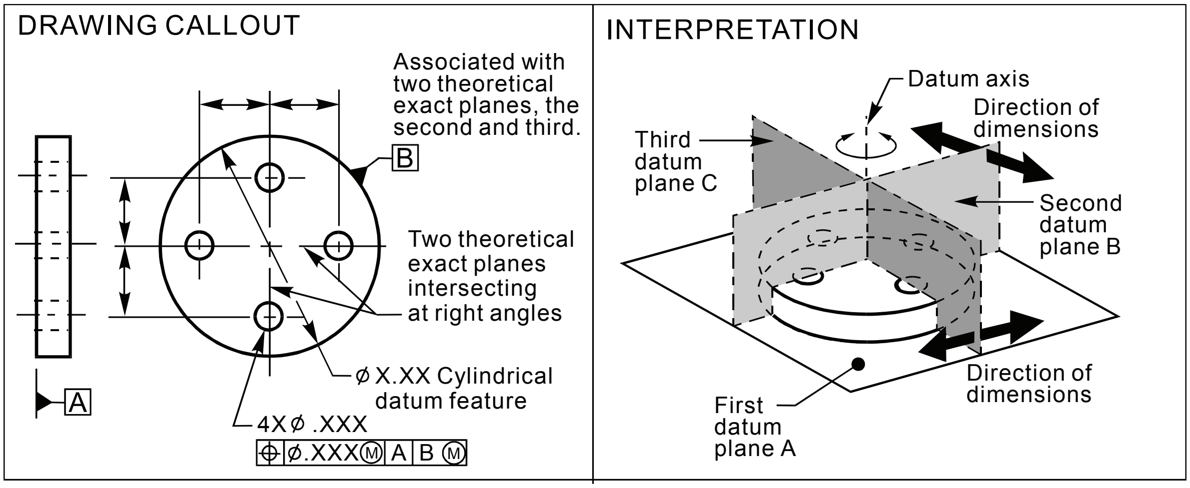

PART WITH CYLINDRICAL DATUM FEATURE
FIGURE 5-87

5.11 GEOMETRIC TOLERANCES.

5.11.1 General. Geometric tolerances are used to define the allowable variation in the form, size, orientation, and location of features on parts and assemblies. Geometric tolerances may be used to control the allowable variation for individual features, and geometric tolerances may be used to control the allowable variation between features. Geometric tolerances control characteristics such as straightness, flatness, roundness, perpendicularity, parallelism, position, etc. Geometric Dimensioning and Tolerancing (GD&T) is the only way to completely and unambiguously define the allowable variation for parts and assemblies. It is easy to define the perfect part or assembly – that is what the CAD model or the drawing geometry represents. GD&T allows the designer to clearly specify the limits of imperfection within which a part or assembly will function properly.

5.11.2 Rules Applicable To Use Of Geometric Tolerance Symbols.

a. The perfect form requirement of Rule #1 applies even when geometric tolerances are specified for a feature of size. Straightness applied to the derived median line or derived median plane of a feature of size is an exception.

b. Geometric form tolerances are applied to features of size only when necessary to control form more precisely than the limits established by Rule #1 or its exceptions.

c. Profile tolerances, in themselves, establish an envelope of perfect form at MMC and LMC and are therefore not subject to usage limitations in (b) above.

d. Runout tolerances may control form, orientation and location as applicable. These tolerances may be used when it is necessary to control the interrelationship between features even when size tolerances adequately control the form of each individual feature.

e. Form tolerances in feature control frames are not modified by such terms as TIR, FIR, or R. Straightness applied to a derived median line must be specified with a diameter symbol in the feature control frame.

f. Orientation tolerances must always be related to a datum reference frame; these include parallelism, perpendicularity, and angularity.

g. Form tolerances may not be related to a datum reference frame; these include flatness, straightness, circularity (was roundness) and cylindricity.

h. Profile tolerances are very versatile, and may or may not be related to a datum reference frame depending on the design requirements. Profile tolerances may control form, size, orientation, and location depending on the context in which they are used.

i. A tolerance of form or orientation may be specified where no tolerance of size is given, as in flatness control after assembly.

5.11.3 Rules Applicable To Use Of Tolerance Of Position Symbols.

a. Rule #2 applies when tolerances of position are specified. See PARAGRAPH 5.10.2.

b. The diameter symbol (Ø) is used to designate a diameter.

c. Where needed, the diameter symbol precedes the specified tolerance in a feature control frame as shown in FIGURE 5-95b.

d. The diameter symbol shall be used everywhere on a drawing, except in notes, in place of the word "DIAMETER" or the abbreviation "DIA".

5.11.4 Symbols. Geometric characteristics are specified on the drawing by the use of symbols. Their construction, form, proportion and characteristic related to their use is shown in FIGURE 5-88. When geometric symbols do not adequately describe the desired condition, a note may be used, either separately or supplementing the symbol, to define the requirement. TABLE 5-11 shows the approved symbol for each characteristic. FIGURES 5-89 thru 5-102 show how the symbols are to be drawn with their modifiers, tolerance, and datum feature references. Unless otherwise specified by the design activity, drawings prepared prior to ASME Y14.5M-1994 which need to be revised, apply the same geometric symbols for dimensioning and tolerancing used to create the original drawing. When the revised drawing does not specifically reference the applicable dimensioning and tolerancing standard or the document's issue by number or date, or both, the matrix shown in TABLE 5A-1 APPENDIX 1 of SECTION 5 within this DRM shall be used to identify the proper standard by which the original drawing was produced. This information shall be specified in the General Notes, and the revisions made to the Engineering Drawing shall comply with the referenced Dimensioning and Tolerancing standard. Note: This practice is in effect an educated guess and should be used cautiously.

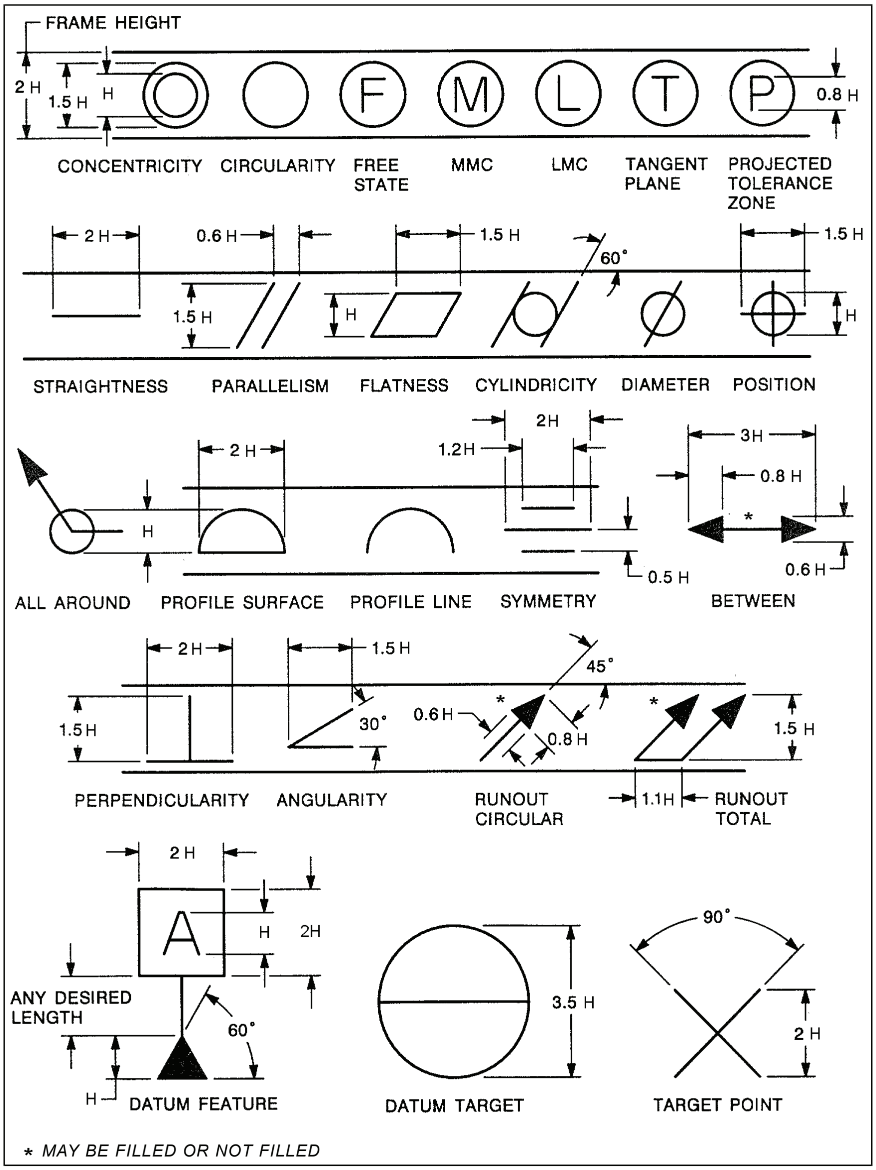

CHARACTERISTIC, FORM AND PROPORTION OF GEOMETRIC TOLERANCING SYMBOLS
FIGURE 5-88

5.11.4 (Continued)

FEATURES	WAS ANSI Y14.5 -1973	NOW ANSI & ASME Y14.5M -1982 Y14.5M -1994	CHARACTERISTICS	WAS ANSI Y14.5 1973	WAS ANSI Y14.5M 1982	NOW ASME Y14.5M 1994	FORMER SYMBOL/S AND NOTES	DRM PARA.REF.
	TYPE OF TOLERANCE	TYPE OF TOLERANCE		SYMBOL	SYMBOL	SYMBOL		
INDIVIDUAL FEATURES	**FORM TOLERANCES**	FORM Never uses a datum	**STRAIGHTNESS**	⏤	⏤	⏤	~	5.14.1
			FLATNESS	⏥	⏥	⏥	⌒ or ⏤	5.14.2 &.3
			CIRCULARITY (was ROUNDNESS)	○	○	○		5.14.3
			CYLINDRICITY	⌭	⌭	⌭		5.14.4
INDIVIDUAL OR RELATED FEATURES		PROFILE May use a datum	**PROFILE OF A LINE**	⌒	⌒	⌒	See Note 1	5.14.5c
			PROFILE OF A SURFACE	⌓	⌓	⌓	See Note 1	5.14.5d thru .5i
RELATED FEATURES		ORIENTATION Always uses a datum	**ANGULARITY**	∠	∠	∠		5.14.8
			PERPENDICULARITY (Squareness)	⟂	⟂	⟂		5.14.7
			PARALLELISM	//	//	//	||	5.14.6
	LOCATION TOLERANCES	LOCATION Always uses a datum	**POSITION**	⌖	⌖	⌖	See Note 2	5.15
			CONCENTRICITY	◎	◎	◎	⦿ See Note 3	5.14.10
			SYMMETRY	⌯	⌖	⌯	⌖ See Note 4	5.14.12
	RUNOUT TOLERANCES	RUNOUT Always uses a datum	**CIRCULAR RUNOUT**	↗*	↗*	↗*	See Note 5(B)	5.14.9.5
			TOTAL RUNOUT	↗*	⌰*	⌰*	See Note 5(C)	5.14.9.6

NOTES:

**ARROWHEADS MAY BE FILLED OR NOT FILLED*

1. PROFILE TOLERANCES CONTROL SIZE AS WELL AS FORM.

2. (A) IF INTERCHANGEABILITY IS PRIMARY, USE POSITION MMC OR RFS.
   (B) IF MINIMUM WALL THICKNESS IS PRIMARY, USE POSITION LMC OR RFS, OR SPECIFY A MINIMUM WALL THICKNESS DIMENSION.

3. CONCENTRICITY SHOULD ONLY BE USED WHEN THERE IS A NEED TO CONTROL THE CENTER OF ALL CROSS-SECTIONAL ELEMENTS. IT IS PREFERRED THAT RUNOUT OR POSITION BE USED.

4. SYMMETRY (1994) MUST ALWAYS BE RFS. if MMC IS NEEDED, USE POSITION.

5. (A) IF A CYLINDRICAL SHAFT NEEDS TO BE CONCENTRIC, USE RUNOUT CONTROL.
   (B) THE SINGLE ARROW SYMBOL WITH THE WORD" CIRCULAR" FOLLOWING, FORMERLY DENOTED TOTAL RUNOUT.
   (C) THE WORD "TOTAL" IS NO LONGER SPECIFIED IN THE FEATURE CONTROL FRAME.

GEOMETRIC CHARACTERISTIC SYMBOLS
TABLE 5-11

5-11.5 Datum Feature Symbols. Each datum feature on a drawing is assigned a different identifying reference letter for which letters of the alphabet, except "I", "O", and "Q", are used. Datum feature assignment begins with the letter "A" and proceeds through the alphabet as required. When datum features requiring identification on a drawing are so numerous as to exhaust the single letter series, the double letter series, "AA" through "AZ", may be used. The datum feature symbol is enclosed in a square frame with a leader line extending from the frame to the concerned feature, terminated by a triangle. See FIGURE 5-89.

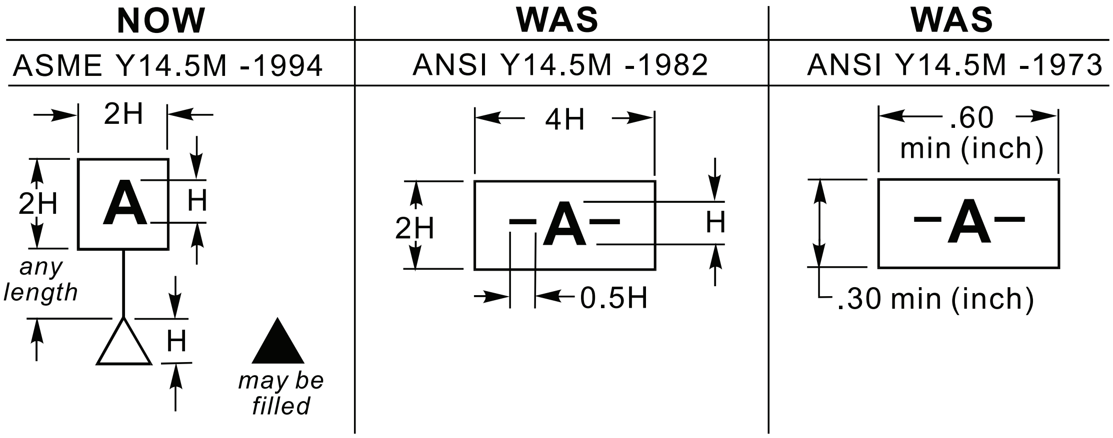

NOTE: Where the same datum feature symbol is repeated to identify the same feature in other locations of the drawing, it need not be identified as reference.

DATUM FEATURE SYMBOL
FIGURE 5-89

5.11.5.1 Methods of Applying the Datum Feature Symbol. The datum feature symbol is applied to the concerned feature surface outline, extension line, dimension line or feature control frame as follows:

a. placed on the outline of a feature surface, or on an extension line of the feature outline but clearly separated from the dimension line. See FIGURE 5-90.

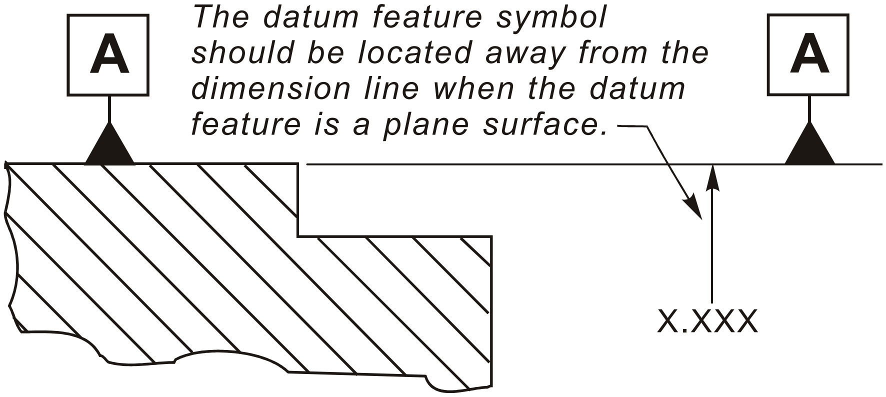

The datum feature symbol should be located away from the dimension line when the datum feature is a plane surface.

DATUM FEATURE SYMBOL ON A FEATURE SURFACE AND AN EXTENSION LINE
FIGURE 5-90

5.11.5.1 (Continued)

b. placed on a an extension of the dimension line of a feature of size when the datum is the axis or center plane. If there is insufficient space for the two arrows, one of them may be replaced by the datum feature triangle. See FIGURE 5-91.

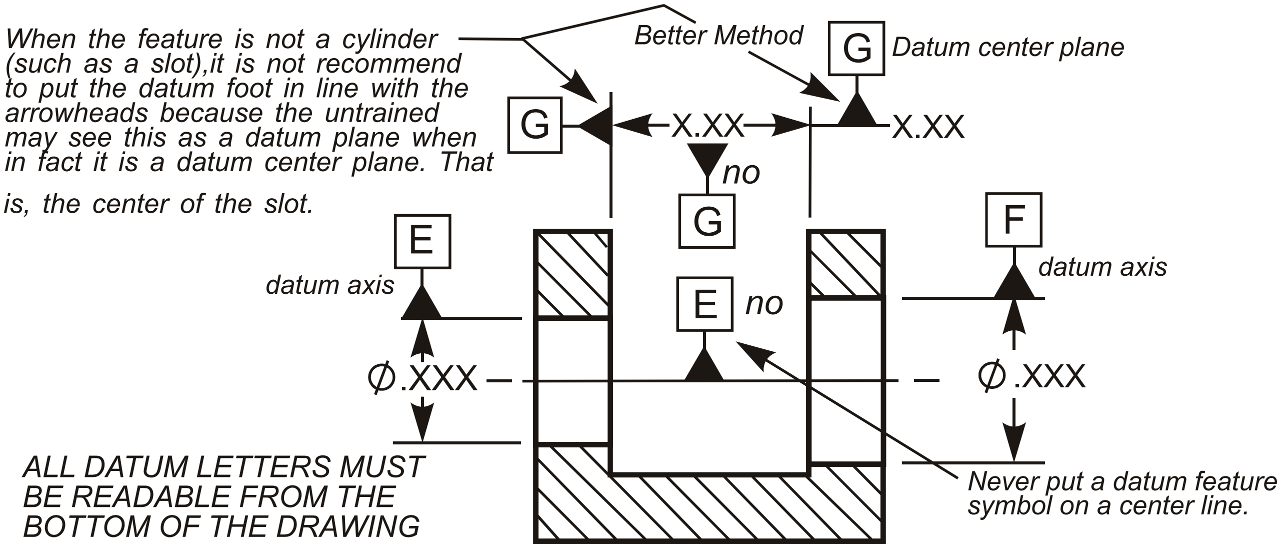

DATUM FEATURE SYMBOLS PLACED ON THE EXTENSION LINE WHEN THE DATUM IS THE AXIS OR CENTER PLANE
FIGURE 5-91

c. placed on the outline of a cylindrical feature surface or an extension line of the feature outline, separated from the size dimension, when the datum is an axis. For CAD systems, the triangle may be tangent to the feature. See FIGURE 5-92.

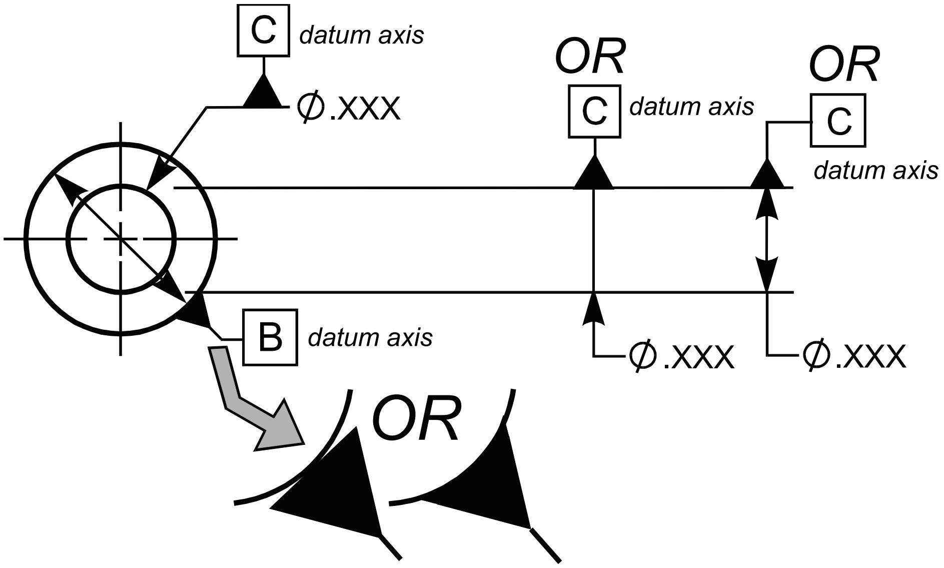

DATUM FEATURE SYMBOLS PLACED ON THE CYLINDRICAL FEATURE SURFACE OR EXTENSION LINE WHEN THE DATUM IS THE AXIS
FIGURE 5-92

5.11.5.1 (Continued)

d. placed on a dimension leader line to the feature size dimension where no geometrical tolerance and feature control frame are used. See FIGURE 5-92.

e. placed below and attached to the feature control frame when the feature (or group of features) controlled has a datum axis or datum center plane. See FIGURES 5-93.

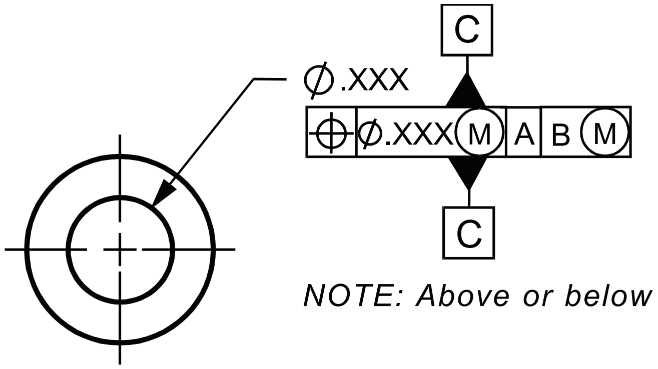

NOTE: Above or below

PLACEMENT OF DATUM FEATURE SYMBOL IN CONJUNCTION WITH A FEATURE CONTROL FRAME
FIGURE 5-93

5.11.6 Basic Dimension Symbol. The symbolic means of labeling a basic or true position is enclosing each such dimension in a rectangular frame. See FIGURE 5-94.

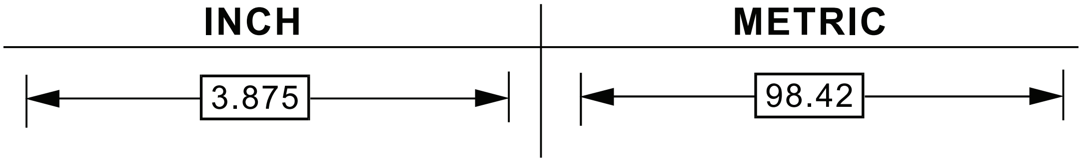

BASIC SYMBOL
FIGURE 5-94

5.11.7 Modifiers Used in Feature Control Frames. These symbols are used to indicate the condition as shown in TABLE 5-12. The use of these symbols in local or general notes is not permitted.

SYM	MODIFIER
Ⓜ	MAXIMUM MATERIAL CONDITION (MMC)
Ⓛ	LEAST MATERIAL CONDITION (LMC)
*Ⓢ	REGARDLESS OF FEATURE SIZE (RFS)
Ⓟ	PROJECTED TOLERANCE ZONE
Ⓕ	FREE STATE
Ⓣ	TANGENT PLANE

RFS is implied on all applicable geometric tolerancing for features of size; the symbol “Ⓢ” is no longer necessary when ASME Y14.5M-1994 is the applicable standard.

MODIFYING SYMBOLS
TABLE 5-12

5.11.7.1 Modifiers. Modifiers, including material condition modifiers, are defined as follows: (NOTE: These symbols may not be used in notes, such as in the general notes.)

a. Ⓜ MAXIMUM MATERIAL CONDITION (MMC)

MMC is where a feature of size contains the maximum amount of material within its limits of size; for example, minimum hole diameter, maximum shaft diameter. When a geometric tolerance such as straightness, orientation, or position is specified to apply at MMC in a feature control frame, the specified tolerance value applies if the toleranced feature is at MMC, and may increase if the feature is produced at a different size within its tolerance range. When a datum feature is referenced at MMC in a feature control frame, the datum feature must be simulated at its MMC size or MMC virtual condition size as applicable. Referencing a datum feature at MMC means the datum feature may move or shift about its datum feature simulator during inspection, possibly adding additional variation to the as-produced part. This is called datum feature shift.

b. Ⓛ LEAST MATERIAL CONDITION (LMC)

LMC is where a feature of size contains the least amount of material within its limits of size; for example, maximum hole diameter, minimum shaft diameter. When a geometric tolerance such as straightness, orientation, or position is specified to apply at LMC in a feature control frame, the specified tolerance value applies if the toleranced feature is at LMC, and may increase if the feature is produced at a different size within its tolerance range. When a datum feature is referenced at LMC in a feature control frame, the datum feature must be simulated at its LMC size or LMC virtual condition size as applicable. Referencing a datum feature at LMC means the datum feature may move or shift about its datum feature simulator during inspection, possibly adding additional variation to the as-produced part. This is called datum feature shift.

c. Ⓢ REGARDLESS OF FEATURE SIZE (RFS)

For geometric tolerances, RFS means that the tolerance applies regardless of the as-produced size of a feature. No additional tolerance is allowed due to size variation. For datum feature references in a feature control frame, RFS means that the datum feature simulator must engage and contact the datum feature during simulation. This means no datum feature shift. ASME Y14.5M-1994 stipulates that for all applicable geometric tolerances “Regardless of Feature Size (RFS)” applies with respect to the individual tolerance, datum feature reference or both, where no modifying symbol is specified. Therefore, the RFS symbol is no longer necessary. However, Rule 2a states that the symbol “Ⓢ“ may be used for position if desired.

d. Ⓟ PROJECTED TOLERANCE ZONE

When the projected tolerance zone symbol appears within a feature control frame, the tolerance zone is projected above the indicated surface by the specified amount. See FIGURES 5-102 and 5-183. A chain line may also be needed to show the direction of projection for thru holes.

e Ⓕ FREE STATE

Free state describes a part or assembly at rest with no other forces besides gravity and an equal and opposite force required to maintain equilibrium, usually applied passively; to put it a different way, free state is the condition where no additional forces or clamping are applied to a part or assembly. By default, all dimensions and tolerances apply in the free-state for rigid parts. Non-rigid parts must have a note or other means defining the allowable forces within which the dimensions and tolerances apply. It is somewhat subjective as to what are and are not rigid and non-rigid parts. The designer must understand the functional requirements and assembly forces and dimension and tolerance the parts accordingly. See FIGURE 5-118.

f. Ⓣ TANGENT PLANE

A tangent plane is a flat plane that contacts the high points of a nominally-flat or plane surface. Certain geometric tolerances may be specified to apply to a tangent plane rather than to the full surface, thus the tolerance only applies to the tangent plane and not the valleys or depressions in the as-produced surface. See FIGURE 5-128.

5.11.7.2 Appropriate Application Of Material Condition Symbols. See TABLE 5-13.

NOW		WAS		WAS	
ASME Y14.5M -1994		ANSI Y14.5M -1982		ANSI Y14.5M -1973	
ALL FEATURE CONTROL FRAMES OTHER THAN POSITION TOLERANCE	POSITION TOLERANCE FEATURE CONTROL FRAME	ALL FEATURE CONTROL FRAMES OTHER THAN POSITION TOLERANCE	POSITION TOLERANCE FEATURE CONTROL FRAME	ALL FEATURE CONTROL FRAMES OTHER THAN POSITION TOLERANCE	POSITION TOLERANCE FEATURE CONTROL FRAME
MMC OR LMC^{2} MUST BE SPECIFIED	MMC OR LMC^{2} MUST BE SPECIFIED	MMC OR LMC^{2} MUST BE SPECIFIED	MMC LMC^{2} OR RFS MUST BE SPECIFIED	MMC MUST BE SPECIFIED	MMC IMPLIED OR SPECIFIED
RFS IMPLIED	RFS^{3} IMPLIED	RFS IMPLIED		RFS IMPLIED	RFS MUST BE SPECIFIED

NOTE: Applicability of
MMC Ⓜ
LMC Ⓛ — Is limited to features of size (See PARA. 5.11.7.3)
RFS^{3} Ⓢ

1. Concept applies to tolerance value and datum features of size.
2. LMC was introduced in ANSI Y14.5M-1982.
3. RFS implied; - Symbol no longer necessary when ASME Y14.5M -1994 is used.

APPLICATION OF MODIFIERS
TABLE 5-13

5.11.7.3 Rule That Governs When Material Condition Symbols Are Specified. If it is desired to apply a geometric tolerance or reference a datum feature on an MMC or LMC basis, the appropriate MMC Ⓜ or LMC Ⓛ material condition modifier must be specified. In FIGURE 5-163 datum feature **A** does not have a material condition symbol because it is a plane surface; datum feature **B** and datum feature **C** are features of size, so they may have material condition modifiers applied to their references in the feature control frame.

5.11.8 Feature Control Frame. Geometric tolerances are specified in feature control frames. For geometric tolerances that are not related to a datum reference frame, the feature control frame is divided into two compartments as shown in FIGURE 5-95.

INCH	METRIC
.002	0.05
.005	0.13
.30	7.62
1.25	31.75

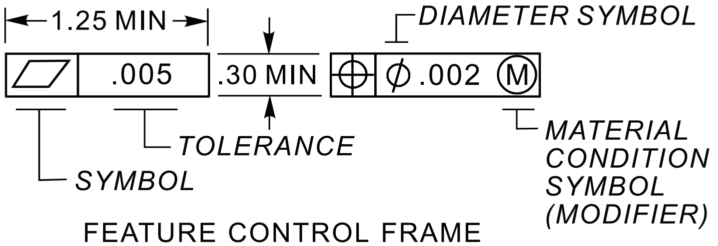

FEATURE CONTROL FRAME
FIGURE 5-95

5.11.9 Feature Control Frame Referencing Datum Features. For geometric tolerances that are related to a datum reference frame, the feature control frame is divided into three compartments as shown in FIGURE 5-96. The datum features are referenced by entering the datum feature letter(s) in the appropriate order in the compartment following (to the right of) the tolerance. The datum feature letter may be followed by a material condition or other modifier (see PARAGRAPH 5.11.7) where applicable.

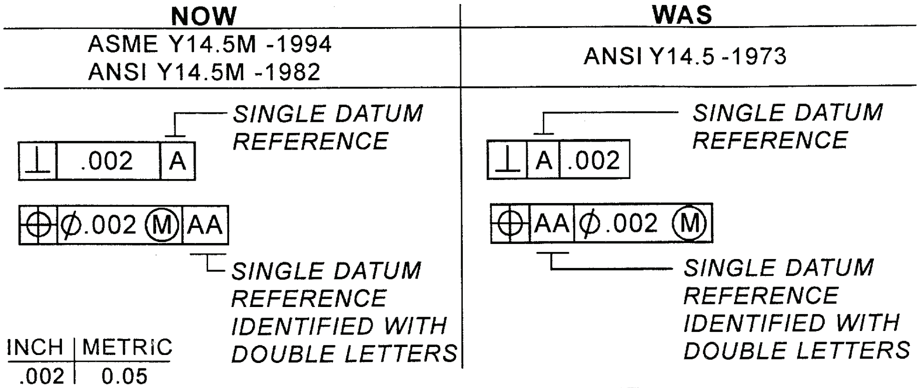

FEATURE CONTROL FRAME
INCORPORATING DATUM REFERENCE
FIGURE 5-96

5.11.10 Referencing Datum Features to Establish the Order Of Precedence in a Datum Reference Frame. The rightmost compartment of a feature control frame is used to reference datum features. This compartment may be divided into one, two, or three sub-compartments depending on how many datum features are required. Reading from left-to-right, the letter(s) in the first datum feature sub-compartment identifies the primary datum feature, the letter(s) in second sub-compartment identifies the secondary datum feature, and the letter(s) in the third sub-compartment identifies the tertiary datum feature. Datum features shall be referenced in the order of functional importance with respect to the requirements of related features. Thus, the datum features will not necessarily be referenced in alphabetical order. Datum features are referenced in feature control frames to establish a datum reference frame. A datum reference frame is a perfect three-axis, three-plane Cartesian coordinate system used as a frame of reference for establishing the origin of geometric tolerances on parts and assemblies. The actual as-produced datum features on a part are always imperfect, and thus are inadequate for establishing origins of tolerance zones and related measurements. Relating geometric tolerances to datum reference frames, which are perfect, allows unambiguous relationship between the tolerance zones and the part, and facilitates inspection. (Note: Datum features were referenced in the middle of the feature control frame in the ANSI Y14.5-1973 standard.) See FIGURE 5-97.

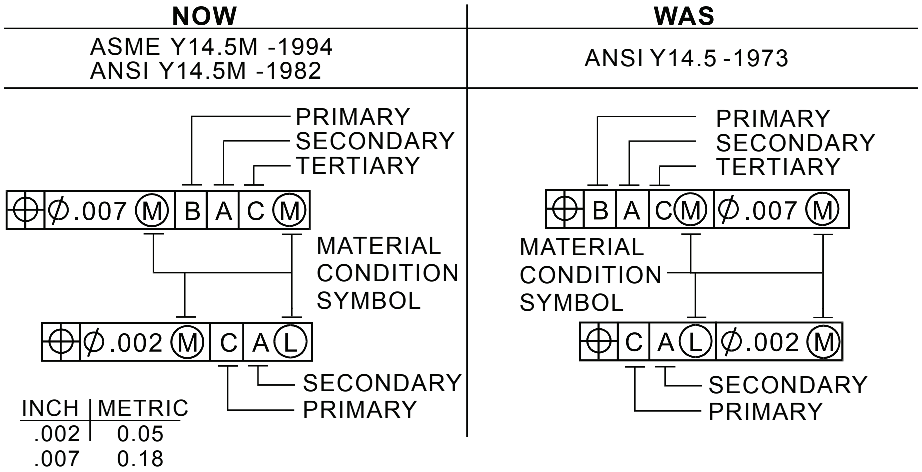

DATUM REFERENCE SHOWING ORDER OF PRECEDENCE
FIGURE 5-97

5.11.11 Multiple Datum Features Of Equal Importance. In some designs, multiple datum features are obviously of equal importance; for example, a runout tolerance related to two equally important coaxial bearing surfaces. See FIGURE 5-98.

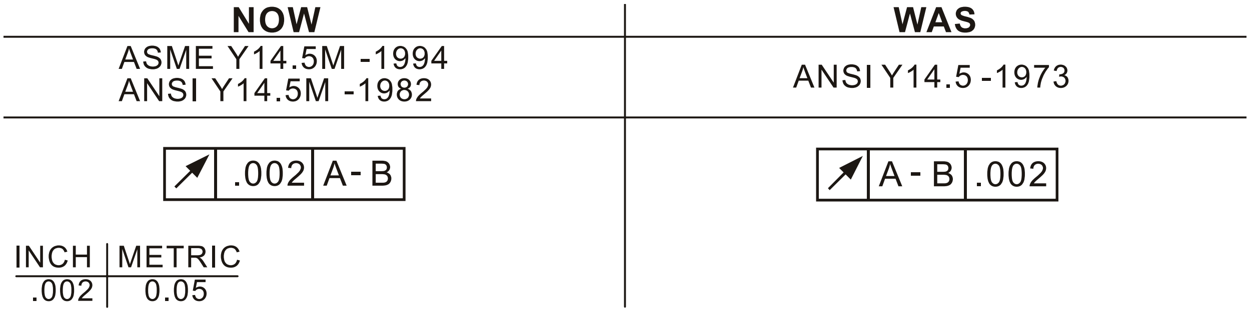

MULTIPLE DATUM FEATURES ESTABLISHING SINGLE DATUM
FIGURE 5-98

5.11.12 Combined Feature Control Frame and Datum Feature Symbols. When a datum feature is controlled by a geometric tolerance, the datum feature symbol may be attached to the feature control frame as shown in FIGURE 5-99a. In such cases, datum features referenced in the feature control frame are not considered part of the datum feature symbol. The positional tolerance example in FIGURE 5-99b shows a feature that is controlled for position in relation to datums **E** and **F** and identified as datum feature **G.** Whenever datum feature **G** is referenced elsewhere on the drawing, the reference applies to datum feature **G** not to datum features **E** and **F.**

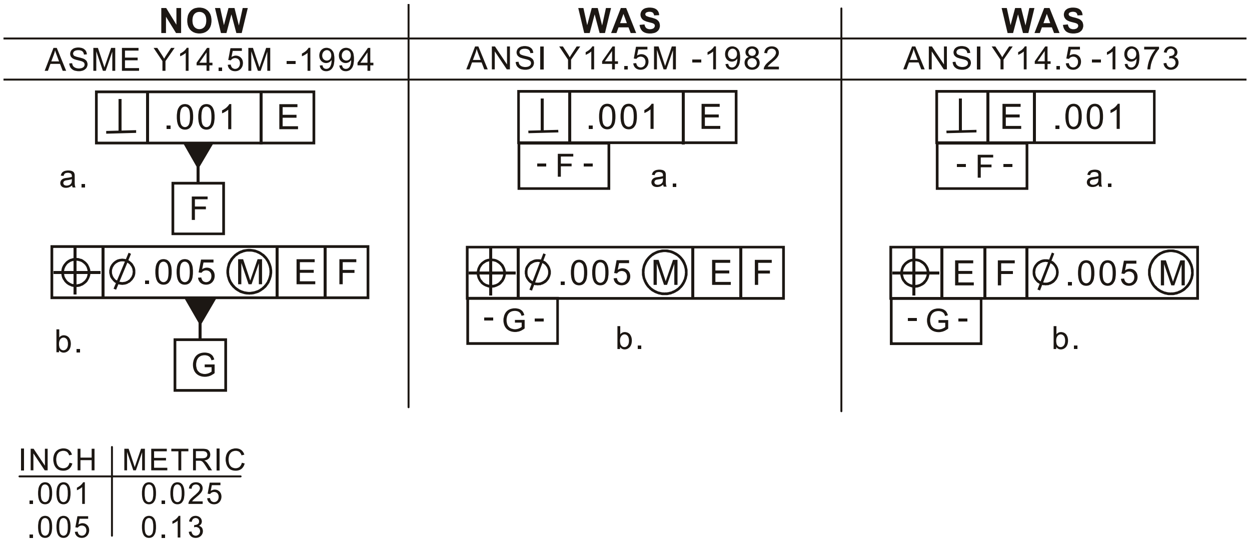

FEATURE CONTROL FRAME WITH DATUM FEATURE SYMBOL
FIGURE 5-99

5.11.13 Multiple Feature Control Frames Which Apply to The Same Feature.

5.11.13.1 Composite Feature Control Frame. A composite feature control frame is used where more than one tolerance of a given geometric characteristic applies to the same feature as well as the interrelation (position and orientation) of features within a pattern. The upper portion of the composite feature control frame defines the Pattern-Locating Tolerance Zone Framework (PLTZF), and specifies the datum features controlling the location of the pattern. The lower portion of the composite feature control frame defines the Feature-Relating Tolerance Zone Framework (FRTZF), and specifies the datum features controlling the orientation of the pattern. The tolerance for the FRTZF must be less than the tolerance for the PLTZF. A single entry of the geometric characteristic symbol is followed by each tolerance requirement, one above the other, separated by a horizontal line. See FIGURE 5-100.

NOW	WAS
ASME Y14.5M -1994 ANSI Y14.5M -1982	ANSI Y14.5 -1973
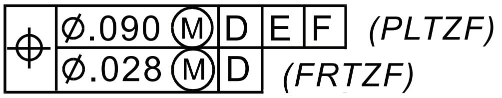	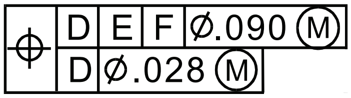

INCH	METRIC
.028	0.71
.090	2.28

COMPOSITE FEATURE CONTROL FRAME
FIGURE 5-100

5.11.13.2 Two Single-Segment Feature Control Frames. Where it is desired to relate a feature or pattern of features to more than one datum reference frame, single-segment feature control frames are used. Each single-segment feature control frame is no different than any other single-segment feature control frame. In the example shown in FIGURE 5-101, both single-segment positional tolerance feature control frames control the orientation and location of the toleranced features to each respective datum reference frame. Using the technique shown in the figure, the tertiary (and sometimes secondary) datum feature referenced in the upper feature control frame is not repeated in the lower feature control frame. Thus, the toleranced features are oriented and located to both datum reference frames, but one less datum feature is referenced in the lower segment. The toleranced features are oriented and located within Ø.090 to datum reference frame D, E, F, and oriented and located within Ø.028 to datum reference frame D, E. Omission of datum feature F in the lower segment means the Ø.028 tolerance zones are not basically located to Datum F, and are free to translate within the larger tolerance zones defined in the upper segment, which are related to Datum F.

NOW	WAS
ASME Y14.5M -1994	ANSI Y14.5 -1982
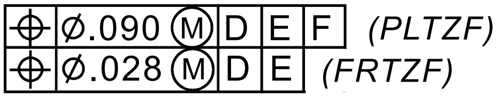	NOT PREVIOUSLY COVERED

INCH	METRIC
.028	0.71
.090	2.28

TWO SINGLE - SEGMENT FEATURE CONTROL FRAME
FIGURE 5-101

5.11.14 Combined Feature Control FRAME And Projected Tolerance Zone Symbol. Where a positional or orientation tolerance is specified as a projected tolerance zone, the projected tolerance zone symbol is placed in the feature control frame. The dimension indicating the minimum height of the tolerance zone may follow the tolerance and any material condition modifier in the feature control frame. An alternate method for clarification, the projected tolerance zone is indicated with a “chain line” and the minimum height of the tolerance is specified in a drawing view. The projection dimension in the feature control frame may then be omitted. The chain line method is required for thru holes. See FIGURES 5-102 and 5-183.

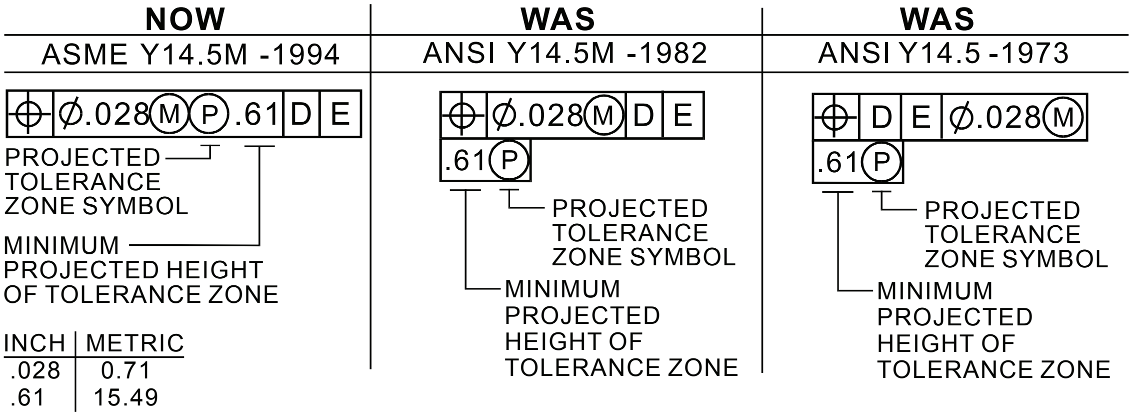

FEATURE CONTROL FRAME WITH A PROJECTED TOLERANCE ZONE
FIGURE 5-102

5.11.15 Tangent Plane Symbol. The tangent plane symbol is used to establish a plane by which the high points of a surface will contact while remaining within the tolerance zone. See FIGURE 5-128. The symbol is placed in the feature control frame following the stated tolerance. See FIGURE 5-102.

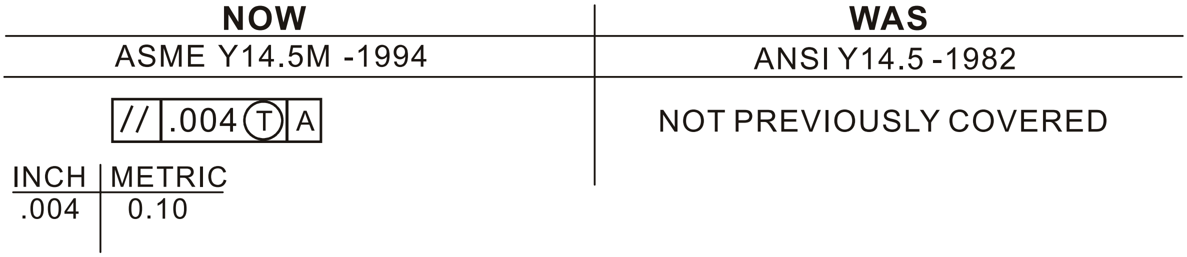

FEATURE CONTROL FRAME WITH TANGENT PLANE SYMBOL
FIGURE 5-103

5.11.16 Free State Symbol. Whenever a part is subject to distortion after removal of forces applied during manufacture due to weight and flexibility, a Free State geometric tolerance symbol may be applied to indicate the permissible amount of tolerance that is permitted in its free state. See FIGURE 5-92. The symbol is placed in the feature control frame following the stated tolerance and any material condition modifier. See FIGURES 5-104 and 5-118.

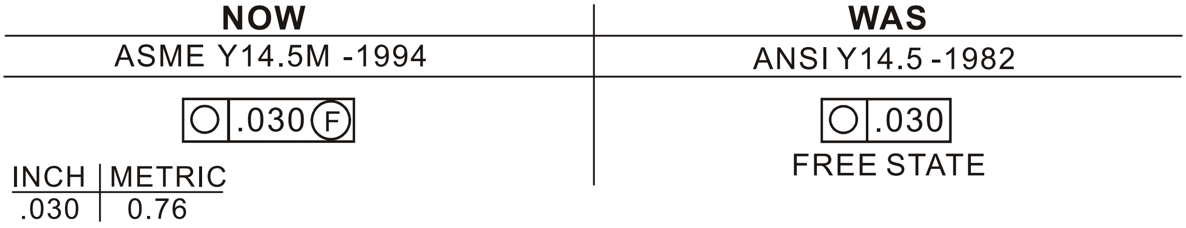

FEATURE CONTROL FRAME WITH FREE STATE SYMBOL
FIGURE 5-104

5.12 DATUM TARGETS.

5.12.1 Tolerancing Of Datum Features. Like every other feature, datum features must be toleranced before they can be used as datum features. Due to excessive variation inherent in certain manufacturing processes, some features are good candidates for use with datum targets; for example, surfaces produced by casting, forging, and molding; surfaces adjacent to welds; and surfaces of thin sheet metal. All of these parts are subject to bowing, warping, and distortion; therefore, it may be a good idea to use datum targets instead of using the entire surface as a datum feature. For example, a cast surface may actually rock or wobble when placed in contact with a datum feature simulator, such as a machine table or surface plate, thereby making accurate and repeatable measurements very difficult. To overcome this problem, the datum target method may be used.

5.12.2 Datum Target Method. The datum target method is a useful technique for relating the above mentioned parts to a datum reference frame. Normally, three datum targets are required to establish the primary datum plane, two datum targets establish the secondary datum plane, and a single datum target establishes the tertiary datum plane. Additional datum targets may be indicated when necessary. It is at these points, lines or areas that contact is made with the processing and inspection equipment.

5.12.3 Datum Target Symbol. The datum target symbol is a circle divided by a horizontal line through the center as shown in FIGURE 5-105. Where the target is an area, the size of the area is entered in the top half of the symbol; otherwise, the top half is left blank. A solid radial leader line touching the symbol is extended to a target symbol and indicated by the target symbol "X" as a Target Point, Target Line, or Target Area as applicable. See FIGURE 5-106. A dashed radial line is used when the datum target is on the far (hidden) side. The symbol is identified as usual.

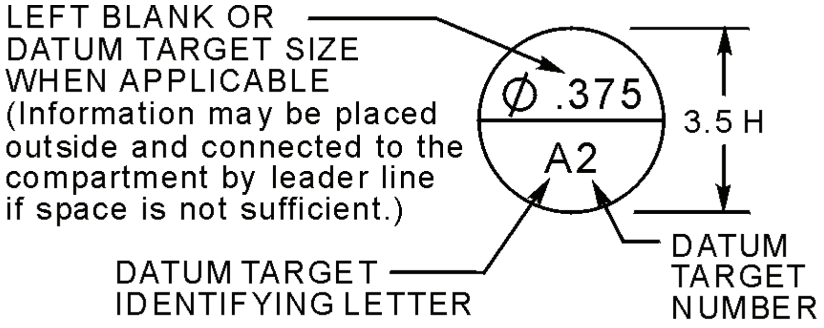

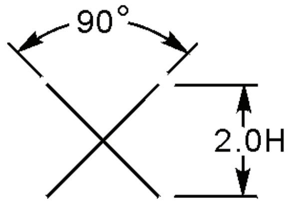

NOTE: Where H = letter height. See SECTION 3, TABLE 3-2

DATUM TARGET SYMBOL
FIGURE 5-105

TARGET POINT SYMBOL
FIGURE 5-106

5.12.3.1 Datum Target Area and Datum Target Points. See TABLE 5-14.

NOW	WAS
ASME Y14.5M -1994 ANSI Y14.5M -1982	ANSI Y14.5 -1973
DATUM TARGET AREA (See PARAGRAPH 5.12.4.3) Ø.38 / A1 The datum target symbol is a circle with a horizontal line through it. The upper half indicates the target area size where applicable, and the lower half indicates the datum identifying letter and target number.	A 1 The datum target symbol is a circle divided into four quadrants. The letter in the upper-left quadrant identified its associated datum feature; the numeral in the lower-right quadrant identifies this target.
ADDED SYMBOL FOR: DATUM TARGET POINT (See PARAGRAPH 5.12.4.1) OR DATUM TARGET LINE (See PARAGRAPH 5.12.4.2) ×	NOT PREVIOUSLY COVERED

DATUM TARGET AREA AND TARGET POINT
TABLE 5-14

5.12.4 Locating Datum Targets. Datum targets are often separated as far apart as possible to facilitate a stable setup. Datum targets should be dimensioned relative to each other and located on surfaces that will not be machined. On castings and forgings they should be located on one side of the parting line, not too close to a fillet or corner, and not on the parting line or on a gate. If a separate machining drawing is made of the casting or forging, or if a separate machining view is made on the casting or forging drawing, the datum target points shall be shown in the same location as on the casting or forging but shall not be dimensioned. When a separate machining drawing is made, modify the general note to read: " ⊖SYMBOL DESIGNATES DATUM TARGETS. SEE DRAWING XXXXXX". For an example of locating and dimensioning datum targets see FIGURES 5-107 THRU 5-109. Datum target information should be completely duplicated on the machining drawing if it is known that the machine shop will not have access to the casting drawing.

5.12.4.1 Datum Target Point. The symbol " **X** " as shown in FIGURE 5-106 is dimensionally located on a direct view of the surface. When a direct view does not exist, the point location is dimensioned as shown in FIGURE 5-107.

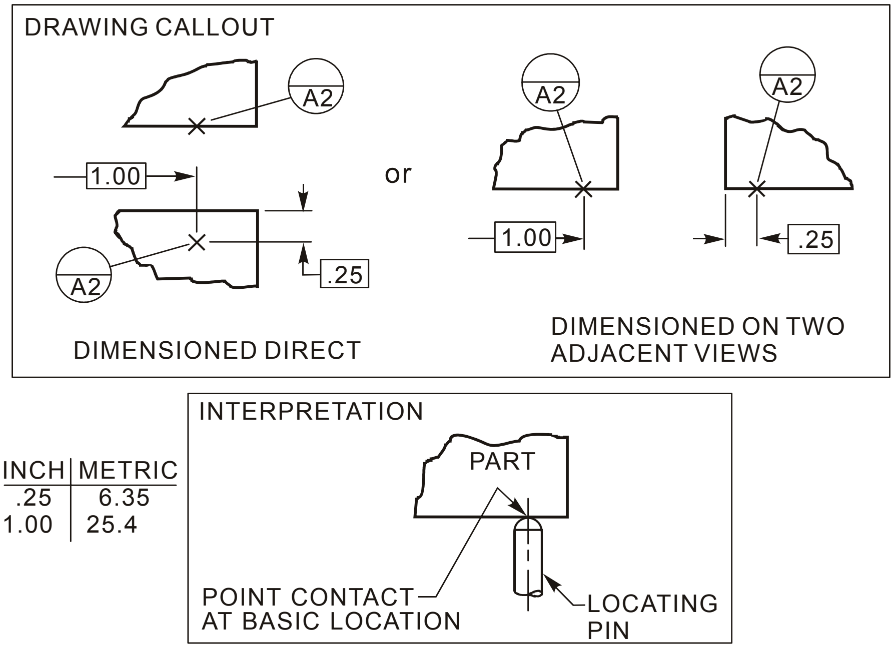

INCH	METRIC
.25	6.35
1.00	25.4

DATUM TARGET POINT
FIGURE 5-107

5.12.4.2 Datum Target Line. A datum target line shall be indicated by a phantom line on a direct view of the surface; the symbol " **X** " may also be shown on an edge view of the surface. See FIGURE 5-108. The length or extent of the datum target line may also be specified if needed for clarity.

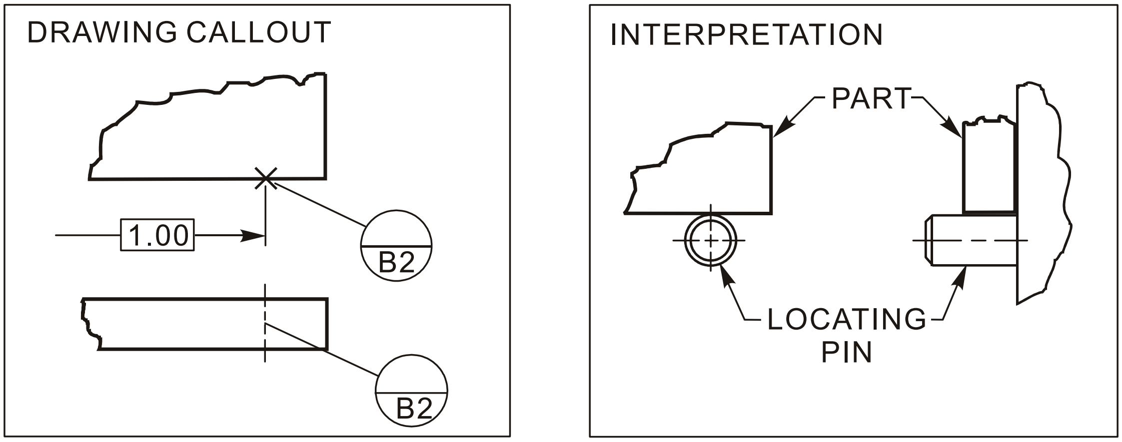

INCH	METRIC
1.00	25.4

DATUM TARGET LINE
FIGURE 5-108

5.12.4.3 Datum Target Areas. On applications that require area contact to establish a datum, one or more datum target areas of desired size and shape are specified. A datum target area is indicated by section lines inside a phantom line of the desired shape with dimensions controlling the shape. The diameter of a circular area may be placed in the top half of the datum target symbol. See FIGURE 5-109.

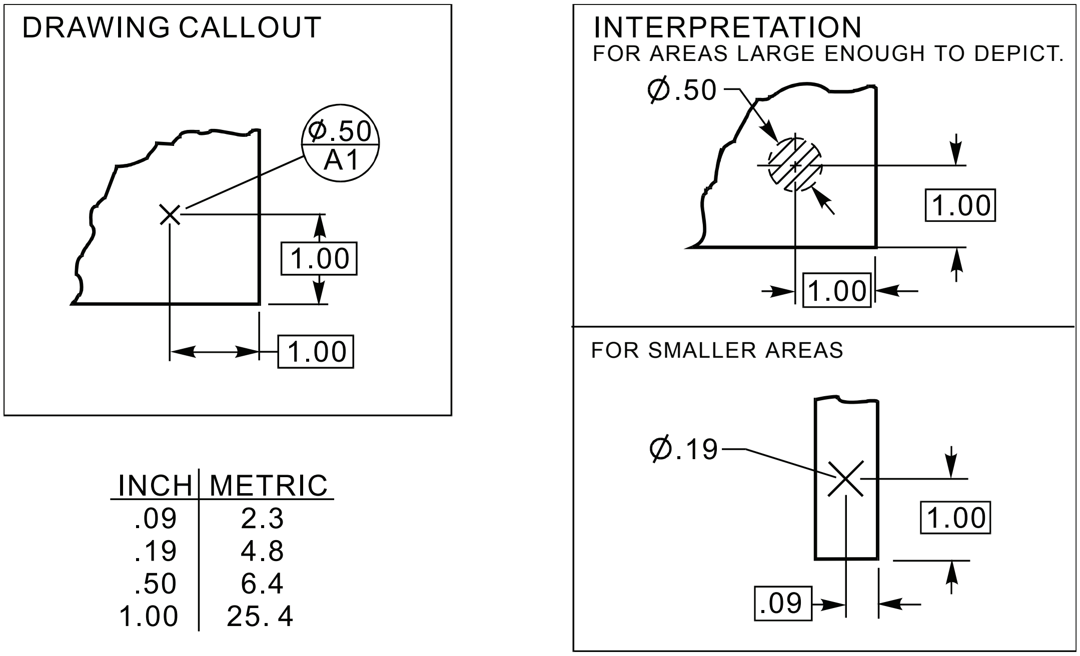

INCH	METRIC
.09	2.3
.19	4.8
.50	6.4
1.00	25. 4

DATUM TARGET AREA
FIGURE 5-109

5.13 FEATURE CONTROL FRAME PLACEMENT.

5.13.1 Application Of Feature Control Frame. The feature control frame shall be associated with the feature(s) being toleranced by one of the methods shown in FIGURE 5-110 (inch and metric).

INCH	METRIC
.001	0.025
.0015	0.038
.0025	0.064
.003	0.08
.004	0.10
.005	0.13
.030	0.76
.09	2.3
.25	6.4
.311	7.90
.317	8.05
.375	9.52
.750	19.05
.756	19.20
1.000	25.40
1.245	31.62
1.250	31.75
1.370	34.80
1.375	34.92
1.620	41.15
1.625	41.28
1.750	44.45
1.756	44.60
2.250	57.15
3.375	85.73
4.000	101.60

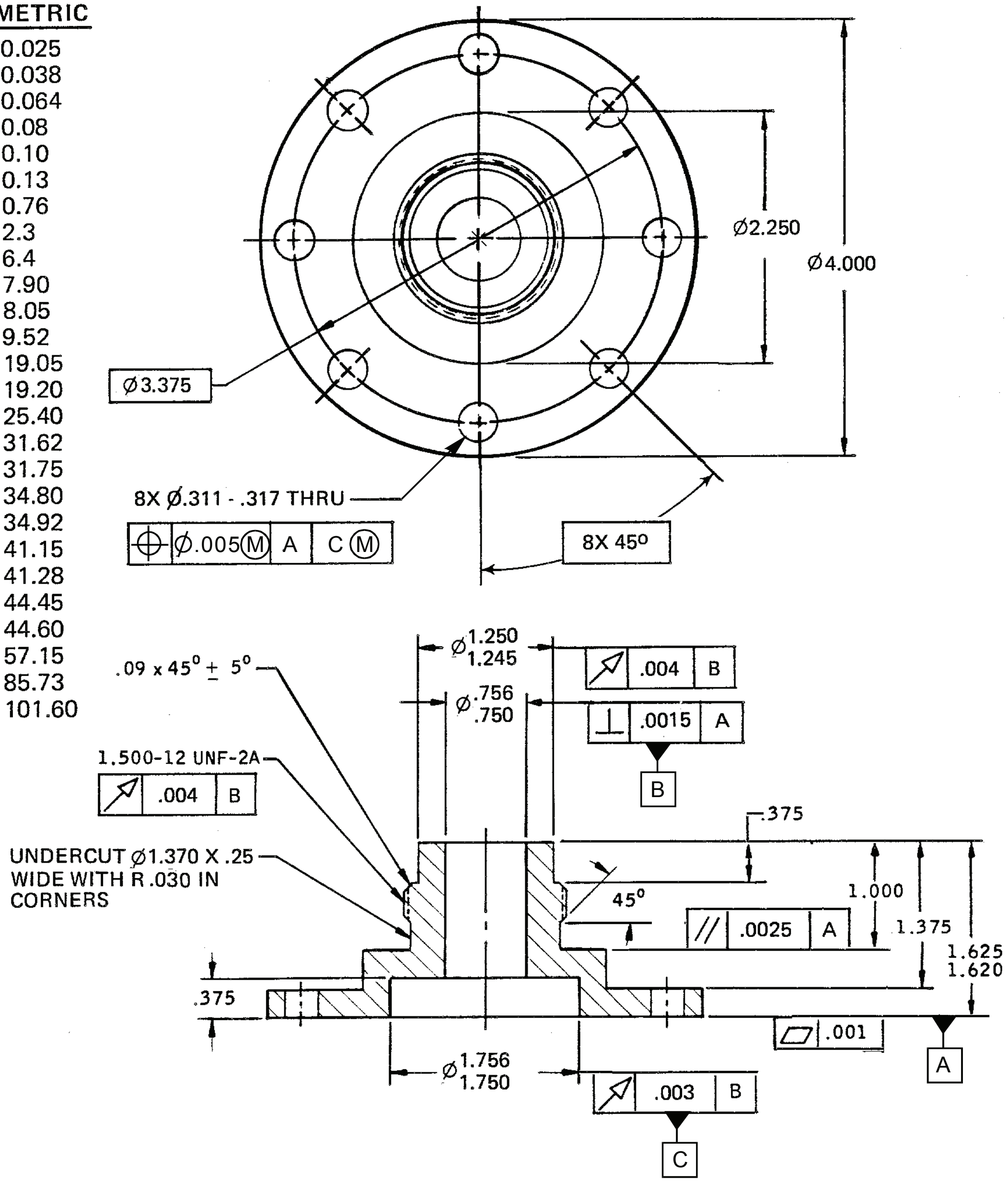

APPLICATION OF GEOMETRIC TOLERANCING FEATURE CONTROL FRAMES
FIGURE 5-110

5.14 DRAWING APPLICATION AND INTERPRETATION OF GEOMETRIC TOLERANCES.

NOTE: The following illustrations show the method of applying geometric tolerances to drawings and the interpretation of the tolerance zone provided by each. Additional information for metric geometric tolerances for features without individual tolerance indications is provided in ISO 2768-2 for specifying general geometric tolerances in three classes referred to as "**H**", "**K**" and "**L**".

5.14.1 Flatness. Flatness is the condition of a surface having all elements in one plane. Flatness is a form tolerance and shall not be related to a datum reference frame.

5.14.1.1 Flatness Tolerance. A flatness tolerance specifies a tolerance zone bounded by two parallel planes; the toleranced surface must lie on or within the tolerance zone. A flatness tolerance feature control frame is attached to a leader line or an extension line separated from the size dimension in a true profile view of the controlled surface. See FIGURE 5-111. The feature control frame may also be directed to the surface using a leader in a view that shows the surface as a plane; the leader terminates with a dot within the boundary of the surface. The expression "MUST BE CONCAVE" or "MUST BE CONVEX" may be added if necessary; if these notes are added, additional specifications should be developed and supplied which explain the exact requirements to be achieved, as no actual surface is perfectly convex or concave. Due to the fact that a flatness tolerance is not allowed to be related to a datum reference frame, inspection may need to level the entire surface to the inspection table before checking the surface for flatness.

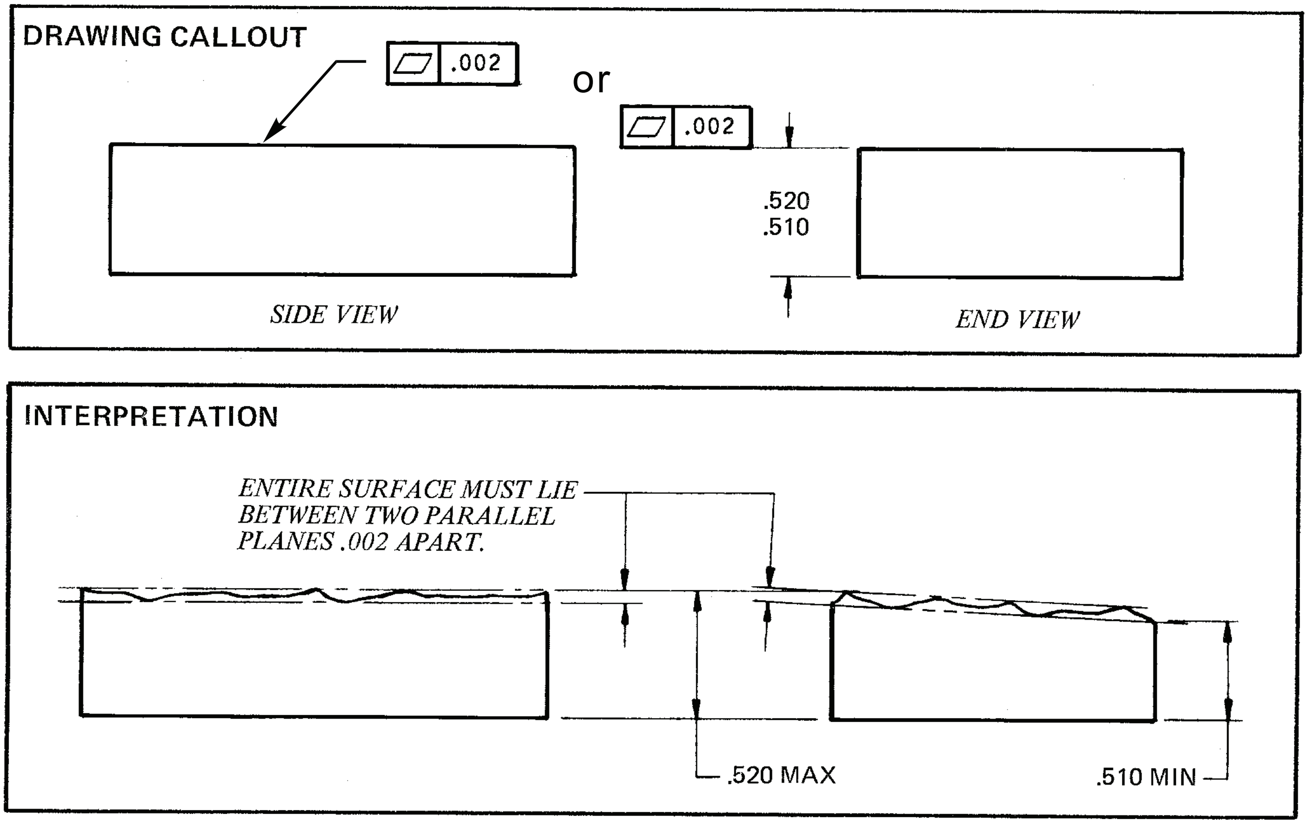

INCH	METRIC
.002	0.05
.510	12.95
.520	13.21

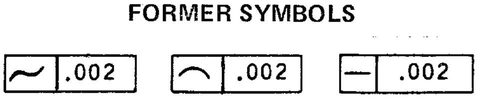

FLATNESS
FIGURE 5-111

5.14.2 Straightness. Straightness controls how straight elements must be. Straightness is a condition where all elements of a surface, a derived median line, or derived median plane lie on or within a straightness tolerance zone. Straightness is a form tolerance and shall not be related to a datum reference frame.

5.14.2.1 Straightness Tolerance of Surface Elements of a Cylindrical Feature. A straightness tolerance applied to a surface specifies a set of tolerance zones, each bounded by two parallel lines, within which all points of the considered line must lie. The straightness feature control frame is attached to a leader line or an extension line of the surface separated from the size dimension and applied in a view where the surface elements to be controlled are represented as a straight line. The straightness tolerance must be less than the size tolerance except as noted in PARAGRAPH 5.14.2.2. See FIGURE 5-112. This application is not used to specify straightness of a derived median line. Drawings which specify straightness of a derived median line are to be interpreted to mean that the derived median line must lie within a cylindrical tolerance zone equal to the specified tolerance. See FIGURE 5-113.

5.14.2.2 Straightness Tolerance Allowing the Rule #1 to Be Violated. If the perfect form requirement of Rule #1 is released, a straightness tolerance applied to surface elements combined with the size tolerance may be used to control the overall form of the feature as shown in FIGURE 5-112b.

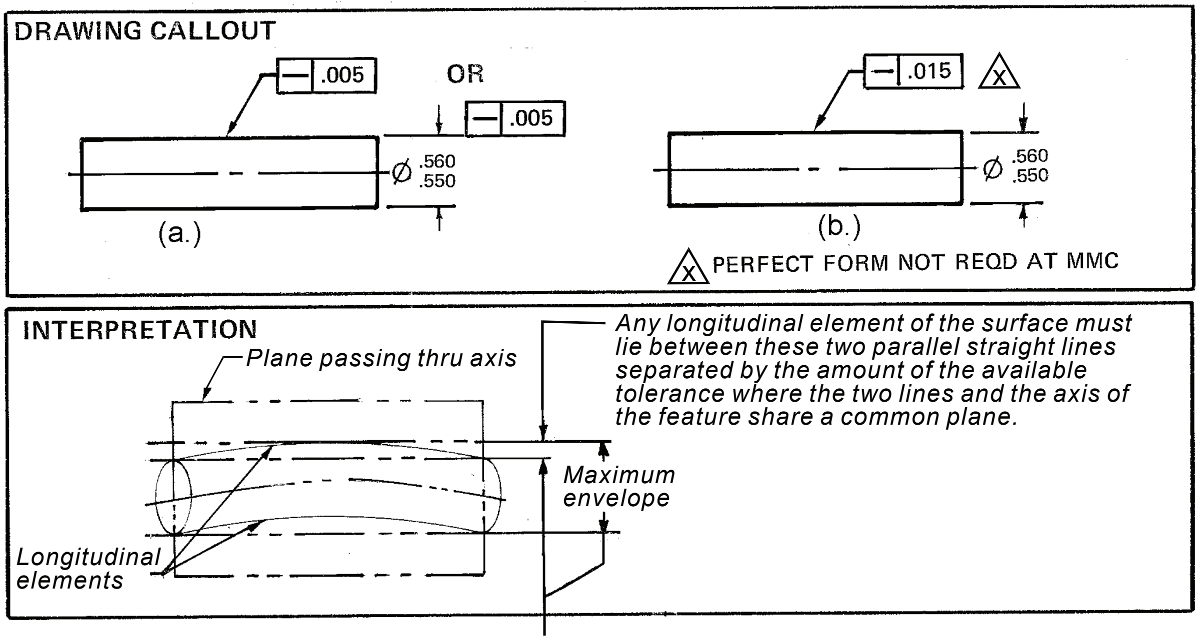

	SYMBOL	STRAIGHTNESS TOLERANCE ZONE AND ENVELOPE ALLOWED										
INCH		FEATURE SIZE	.560	.559	.558	.557	.556	.555	.554	553	552	.551	.550
	⏤ .005		.000	.001	.002	.003	.004	.005	←			→	.005
	MAX ENVELOPE		.560	←			→	.560	.559	.558	.557	.556	.555
	⏤ .015 △X		.015	←								→	.015
	MAX ENVELOPE		.575	.574	.573	.572	.571	.570	.569	.568	.567	.566	.565

	SYMBOL	STRAIGHTNESS TOLERANCE ZONE AND ENVELOPE ALLOWED										
METRIC		FEATURE SIZE	14.22	14.20	14.17	14.15	14.12	14.10	14.07	14.05	14.02	14.00	13.97
	⏤ 0.13		0	0.025	0.05	0.08	0.10	0.13	←			→	0.13
	MAX ENVELOPE		14.22	←			→	14.22	14.20	14.17	14.15	14.12	14.10
	⏤ 0.38 △X		.038	←								→	0.38
	MAX ENVELOPE		14.60	14.58	14. 55	14.53	14.50	14.48	14.45	14.43	14.40	14.38	14.35

STRAIGHTNESS OF SURFACE
FIGURE 5-112

5.14.2.3 Straightness of a Derived Median Line for a Cylindrical Feature. When a straightness tolerance is applied to a derived median line on an RFS basis, the maximum straightness tolerance is the specified tolerance. When a straightness tolerance is applied to a derived median line on an MMC basis, the maximum straightness tolerance is the specified tolerance plus the amount the actual local size of the feature departs from its MMC. The same holds true for the maximum envelope/size of the feature to increase in size equal to the amount of departure from MMC. See FIGURE 113.

5.14.2.3.1 Placement of Straightness of Derived Median Line Tolerance Feature Control Frame. Straightness of a derived median line is specified with a cylindrical tolerance zone by specifying a diameter symbol (Ø) with the tolerance. The feature control frame is placed beneath and associated with the size dimension and tolerance or directed to the size dimension location by a leader line. See FIGURE 5-113.

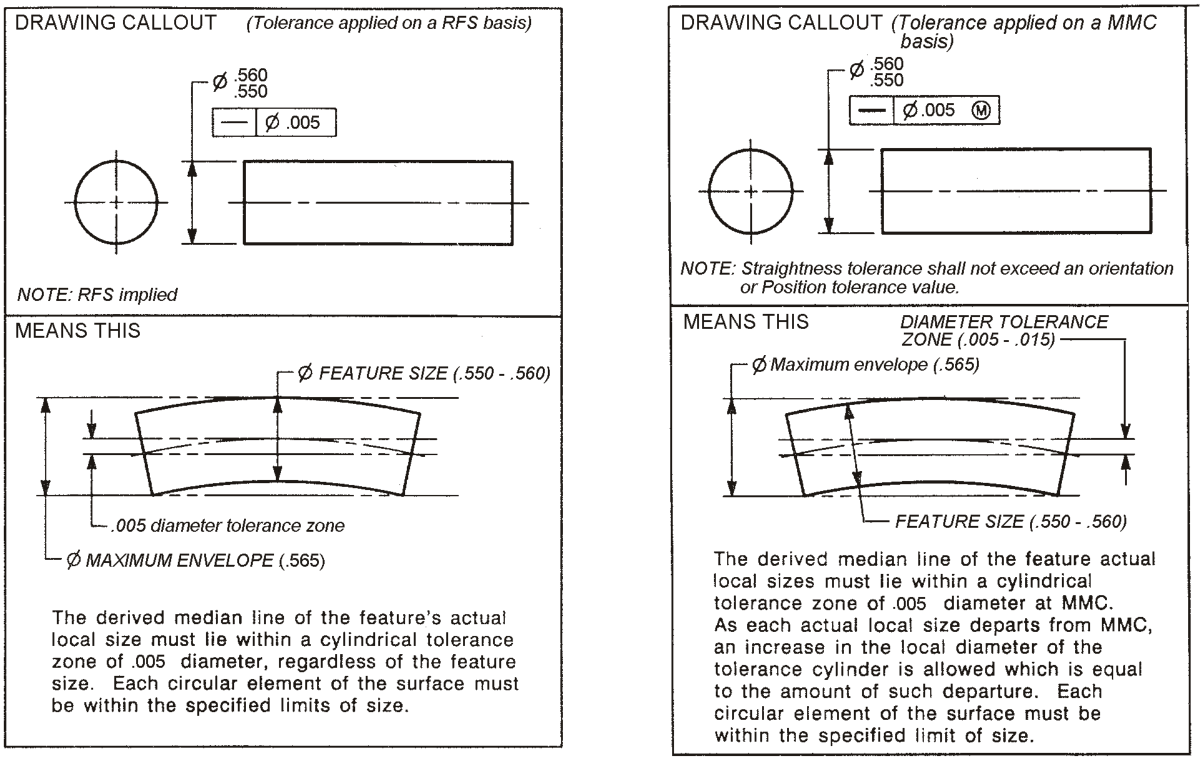

The derived median line of the feature's actual local size must lie within a cylindrical tolerance zone of .005 diameter, regardless of the feature size. Each circular element of the surface must be within the specified limits of size.

The derived median line of the feature actual local sizes must lie within a cylindrical tolerance zone of .005 diameter at MMC. As each actual local size departs from MMC, an increase in the local diameter of the tolerance cylinder is allowed which is equal to the amount of such departure. Each circular element of the surface must be within the specified limit of size.

	SYMBOL	STRAIGHTNESS DIAMETER TOLERANCE ZONE AND ENVELOPE ALLOWED										
INCH	FEATURE SIZE	.560	.559	.558	.557	.556	.555	.554	.553	.552	.551	.550
	—|Ø.005	.005	◄								►	.005
	MAX ENVELOPE	.565	.564	.563	.562	.561	.560	.559	.558	.557	.556	.555
	—|Ø.005 Ⓜ	.005	.006	.007	.008	.009	.010	.011	.012	.013	.014	.015
	MAX ENVELOPE	.565	◄								►	.565

	SYMBOL	STRAIGHTNESS DIAMETER TOLERANCE ZONE AND ENVELOPE ALLOWED										
METRIC	FEATURE SIZE	14.22	14.20	14.17	14.15	14.12	14.10	14.07	14.05	14.02	14.00	13.97
	—|Ø0.13	0.13	◄								►	0.13
	MAX ENVELOPE	14.35	14.33	14.30	14.27	14.25	14.22	14.20	14.17	14.15	14.12	14.10
	—|Ø0.13 Ⓜ	0.13	0.15	0.18	0.20	0.23	0.25	0.28	0.30	0.33	0.36	0.38
	MAX ENVELOPE	14.35	◄								►	14.35

STRAIGHTNESS OF DERIVED MEDIAN LINE
FIGURE 5-113

5.14.2.4 Straightness Tolerance Applied On an RFS, MMC or LMC Basis for Width (Non-Cylindrical) Features of Size. Straightness may be applied on an RFS, MMC, or LMC basis to width features of size (e.g. keyways, keyseats, keys, slabs). The techniques discussed in PARAGRAPH 5.14.2.3 may be applied to non-cylindrical features; the difference is that the straightness tolerance zone is not cylindrical, and the straightness tolerance controls the derived median plane of the feature rather than the derived median line. The derived median plane must lie on or within a tolerance zone bounded by two parallel planes separated by the straightness tolerance value. The technique and feature control frames shown in FIGURE 5-113 applies except the diameter symbol (Ø) is not used.

5.14.2.5 Straightness Tolerance Applied In One or Two Directions On a Flat Surface. Straightness may be applied in one or two directions on a flat surface as shown in FIGURE 5-114. Like all straightness tolerances, straightness applied to a flat surface shall not be related to datums. Where function requires the line elements to be related to a datum reference frame, profile of a line related to a datum reference frame should be specified.

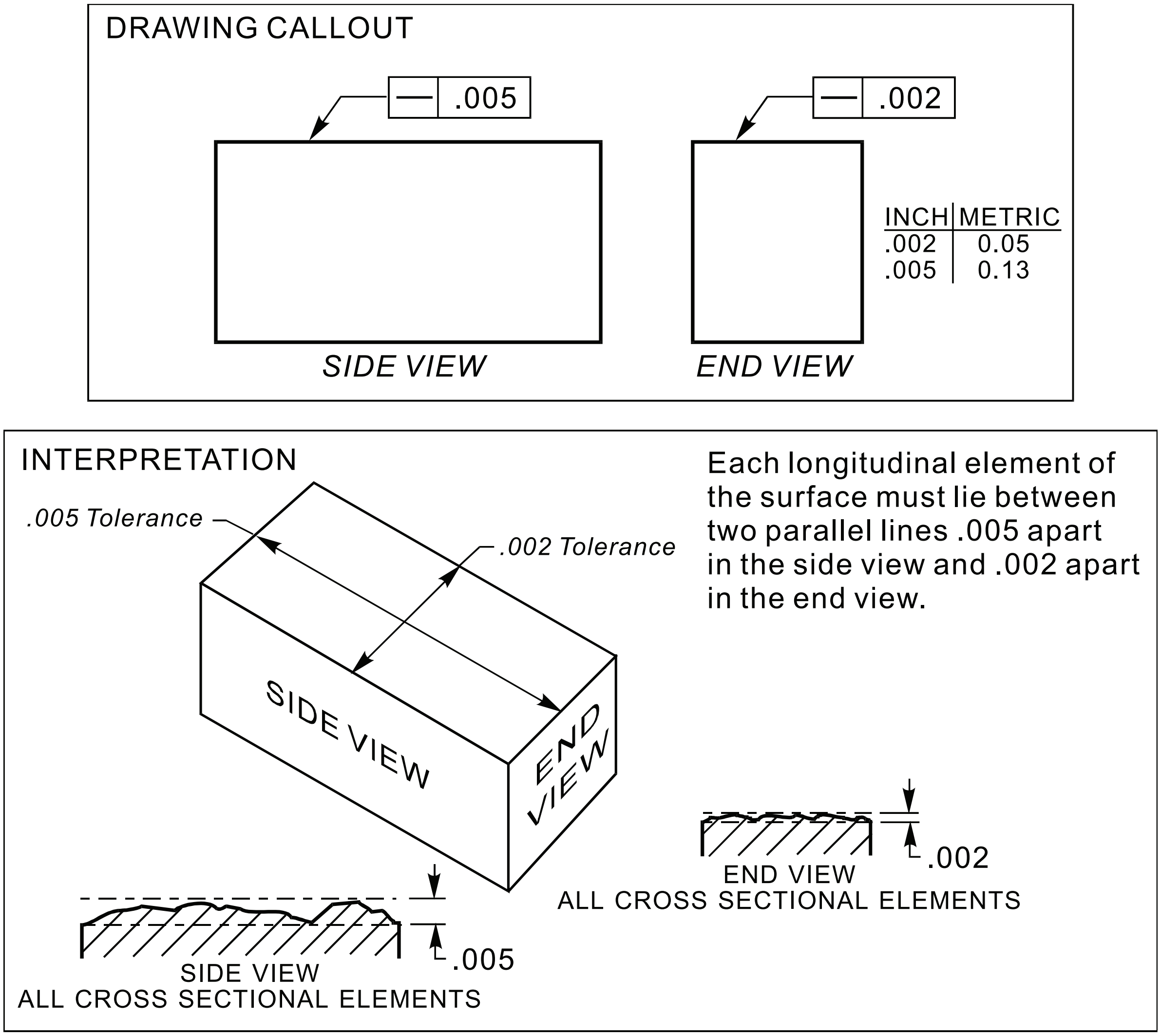

INCH	METRIC
.002	0.05
.005	0.13

Each longitudinal element of the surface must lie between two parallel lines .005 apart in the side view and .002 apart in the end view.

STRAIGHTNESS TOLERANCE APPLIED IN TWO DIRECTIONS OF A FLAT SURFACE
FIGURE 5-114

5.14.3 Circularity. Circularity controls how round surface elements must be. Circularity is a condition of a surface of revolution such as a cylinder, cone, or sphere, where all points of the surface intersected by any plane, (1) perpendicular to a common axis (cylinder, cone), or (2) passing through a common center (sphere), are equidistant from the axis. See FIGURES 5-115, 5-116 and 5-117. Circularity is a form tolerance and shall not be related to a datum reference frame.

5.14.3.1 Circularity Tolerance For a Cylinder or Cone. All points of the surface intersected by **any plane perpendicular to an axis** are equidistant from that axis and each circular element must be within the specified limits of size. See FIGURES 5-115 and 5-116.

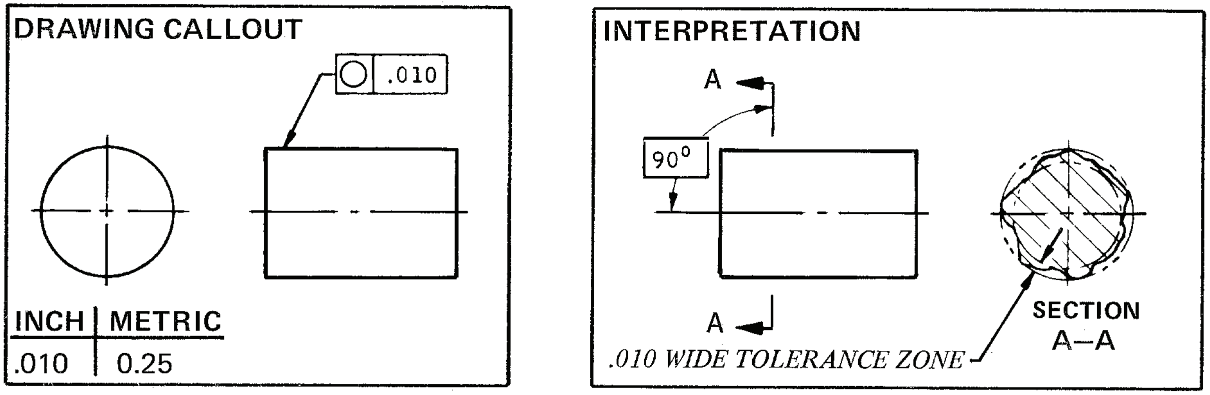

CYLINDRICITY OF CYLINDER
FIGURE 5-115

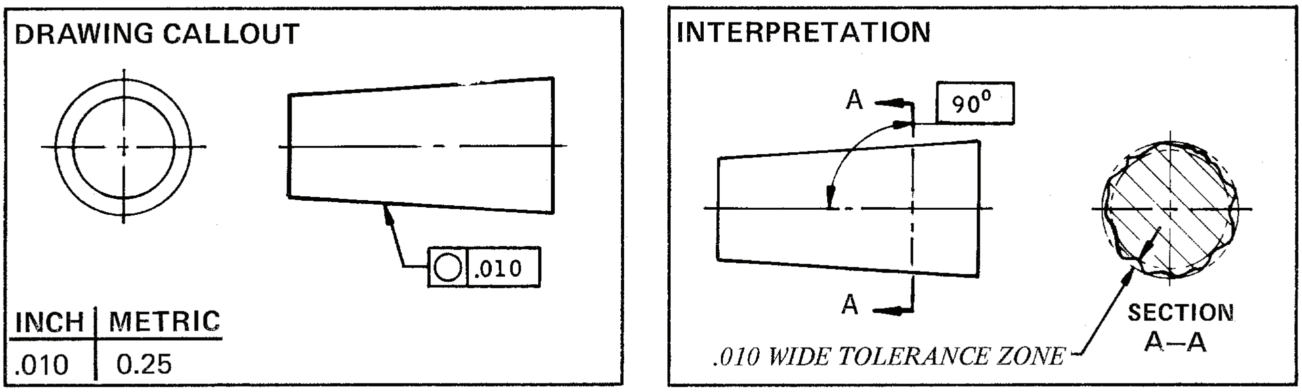

CYLINDRICITY OF CONE
FIGURE 5-116

5.14.3.2 Circularity Tolerance For a Sphere. All points of the surface intersected by **any plane passing through a common center** are equidistant from that center, and each circular element must be within specified limits of size. See FIGURE 5-117.

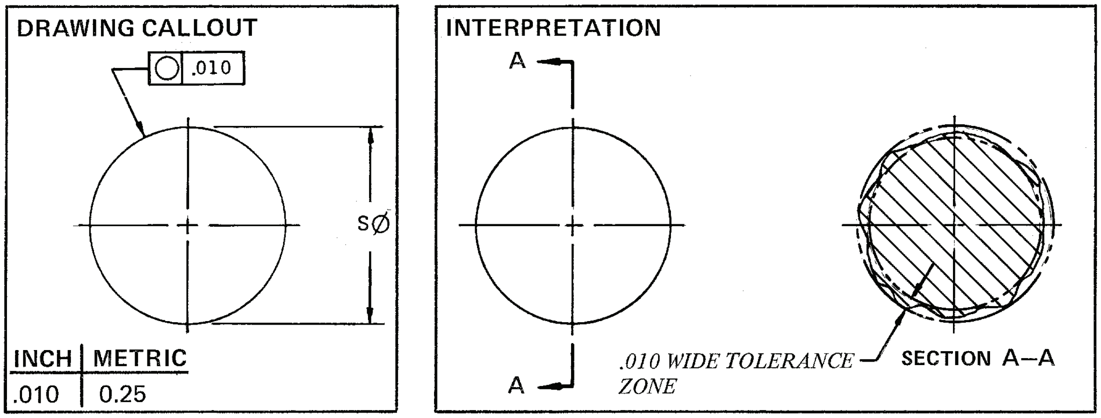

INCH	METRIC
.010	0.25

CIRCULARITY OF SPHERE
FIGURE 5-117

5.14.3.3 Circularity Tolerance Limit. Circularity tolerance must be less than the size tolerance. Features subject to free state variation are an exception to this rule.

5.14.3.4 Circularity, Free-State Variation. Free-state variation can exist in two ways: (1) distortion due to the weight or flexibility of the part, or (2) distortion due to internal stresses set up in fabrication. Parts that are subject to such distortion are referred to as "nonrigid" parts and such distortion is referred to as "free-state variation." The above distortions are accounted for on drawings only when the feature(s) may fall outside the drawing limits and are controlled as follows:

a. By adding a note such as "DIMENSIONS AND TOLERANCES APPLY IN THE RESTRAINED CONDITION" (specify the amount of restraining force allowable to bring feature(s) within drawing limits when necessary).

b. State the allowable free-state variation and show average diameter as shown in FIGURE 5-118.

NOTE: The term "average diameter" or "AVG DIA" is the mean of several diameters (not less than four) used to determine conformance of the diameter tolerance only. Average diameter may also be derived from the circumference and measured with a periphery tape

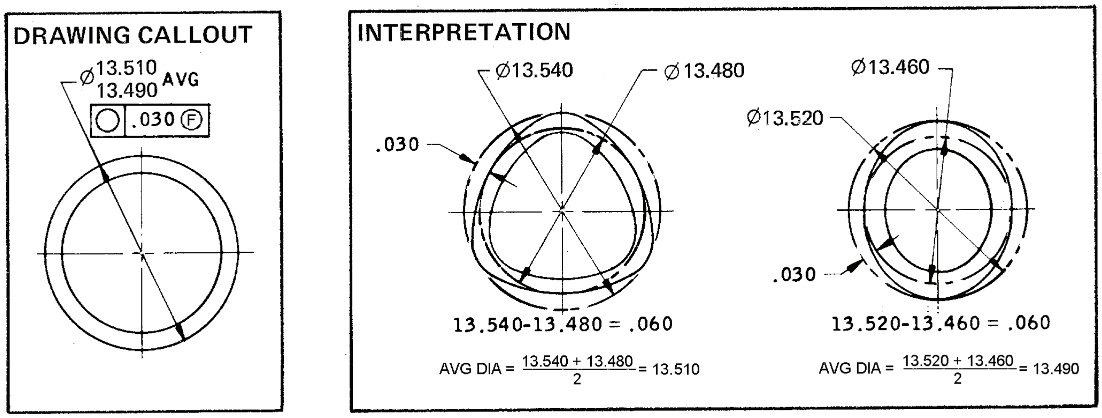

INCH	METRIC
.030	0.76
.060	1.52
13.460	341.88
13.480	342.39

INCH	METRIC
13.490	342.65
13.510	343.15
13.520	343.41
13.540	343.92

CIRCULARITY, FREE STATE VARIATION
FIGURE 5-118

5.14.4 Cylindricity. Cylindricity controls how cylindrical surface elements must be. Cylindricity is a condition of a surface of revolution in which all elements form a cylinder and are equidistant from a common axis. Cylindricity is a form tolerance and shall not be related to a datum reference frame.

5.14.4.1 Cylindricity Tolerance. A cylindricity tolerance specifies a tolerance zone confined to the annular space between two concentric cylinders within which the surface must lie. See FIGURE 5-119. The cylindricity tolerance must be less than the size tolerance.

NOTE: The cylindricity tolerance controls circularity and straightness, as well as parallelism of the line elements of the surface, and that the specified tolerance is always on a radial basis.

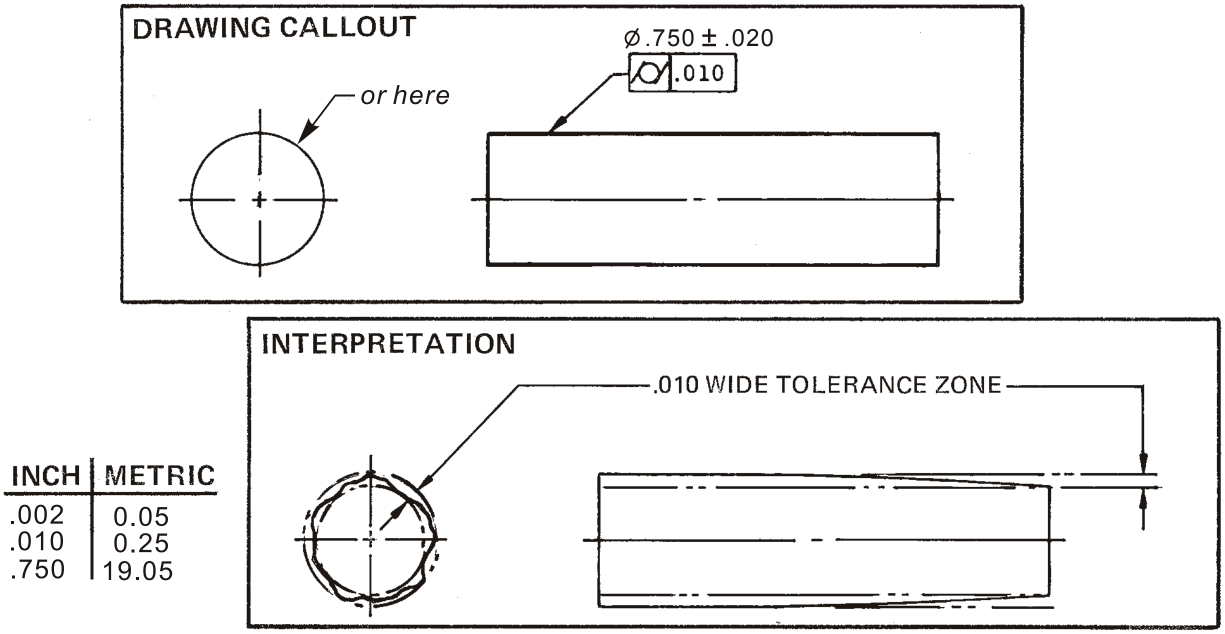

INCH	METRIC
.002	0.05
.010	0.25
.750	19.05

CYLINDRICITY
FIGURE 5-119

5.14.5. Profile Tolerancing. Profile tolerances provide a method to specify a uniform amount of variation along the true profile of a line surface (the true profile is defined by basic dimensions). The basic line or surface may consist of straight lines or curved lines, the latter being either arcs or irregular curves. Profile tolerances may or may not be related to a datum reference frame; this decision is left to the discretion of the designer, and should be decided based upon the functional requirements of the design geometry. Profile tolerances may be applied on an “ALL-AROUND” or "ALL OVER" basis if desired. This technique is sometimes used on cast part drawings. See FIGURE 5-123.

a. **Profile of a Line** Profile of a line applies to the full length, width and depth of the considered feature, but creates a set of tolerance zones, each zone applying to a cross-section of the feature. Each profile of a line tolerance zone is an area. See FIGURE 5-120.

b. **Profile of a Surface** Profile of a surface applies to the full length, width and depth of the considered feature, and creates a single, three-dimensional, volumetric tolerance zone that controls the entire feature (or features) simultaneously. See FIGURE 5-121.

5.14.5.1 Profile Tolerance. A profile tolerance (either bilateral or unilateral) specifies a tolerance zone, always measured normal to the true profile at all points of the profile, within which the specified line or surface must lie.

5.14.5.2 Application Of Profile Tolerances. FIGURES 5-120, 5-121 and 5-123 illustrate methods of dimensioning profiles and comply with the following requirements:

a. A view or section is drawn which shows the desired true profile. True profile of a surface is the basically-defined surface; it is the perfect as-modeled, as-drawn surface defined by basic dimensions and represented by the drawing or model geometry. The true profile of a surface appears in a view where the surface is depicted as a line or edge.

b. The profile is dimensioned by basic dimensions. This dimensioning may be in the form of located radii and angles, or it may consist of coordinate dimensions to points on the profile. See FIGURES 5-39, 5-40 and 5-41.

c. Profile of a line creates a set of tolerance zones, each applying to an individual cross-section of an as-produced feature. Each profile of a line tolerance zone is an area. Profile of a line may be applied to any feature, including features whose cross-sectional profiles may vary due to being tapered or a more complex shape, such as an airfoil. For unilateral and unequal-bilateral profile tolerances, an exaggerated tolerance zone is shown by one phantom line offset from the true profile. The tolerance zone may be shown unilaterally to either side of the true profile. See FIGURE 5-120. Profile of a line and surface tolerances may be applied to the same feature when the line elements in one direction need to be controlled more closely than the surface as a whole.

   Note: Caution should be exercised when applying profile of a line tolerances, as the material covering profile of a line in the ASME Y14.5M-1994 standard is incomplete, misleading, and several rules needed to ensure that profile of a line specifications are unambiguous are missing, thus, there are ambiguities in the meaning of profile of a line specification based on the standard.

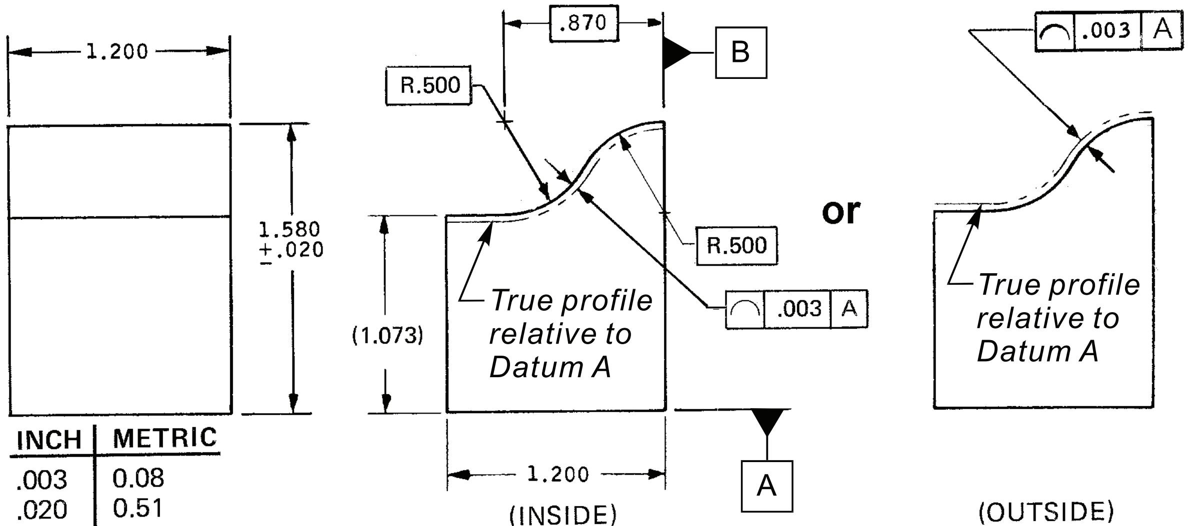

INCH	METRIC
.003	0.08
.020	0.51
.500	12.70
.870	22.10
1.073	27.25
1.200	30.48
1.580	40.13

NOTE: Each line element taken at any random cross section must lie between two profile boundaries .003 apart in relation to Datum A and B. Additionally, the surfaces must be within the limits of size.

PROFILE OF A LINE
(USING UNILATERAL TOLERANCE ZONE)
FIGURE 5-120

Note: Combining profile tolerances and direct tolerancing methods (+/-) as shown above is a faulty practice and should be avoided to ensure drawing specifications are unambiguous and understood.

5.14.5.2 (Continued)

d. Profile of a surface applies to the full length, width and depth of the considered feature, and creates a single, three-dimensional, volumetric tolerance zone that controls the entire feature (or features) simultaneously. Profile of a surface is the most versatile geometric tolerance, as profile of a surface tolerances may be applied to any basically-defined feature. Depending on the context of the specification (the feature-type and datum feature references, if any) profile of a surface may control the form, size, orientation, location, or any combination thereof for the toleranced feature. When the profile tolerance is bilateral, that is, equally on each side of the basic profile, it is not necessary to show phantom lines to depict the tolerance zone. See FIGURE 5-121.

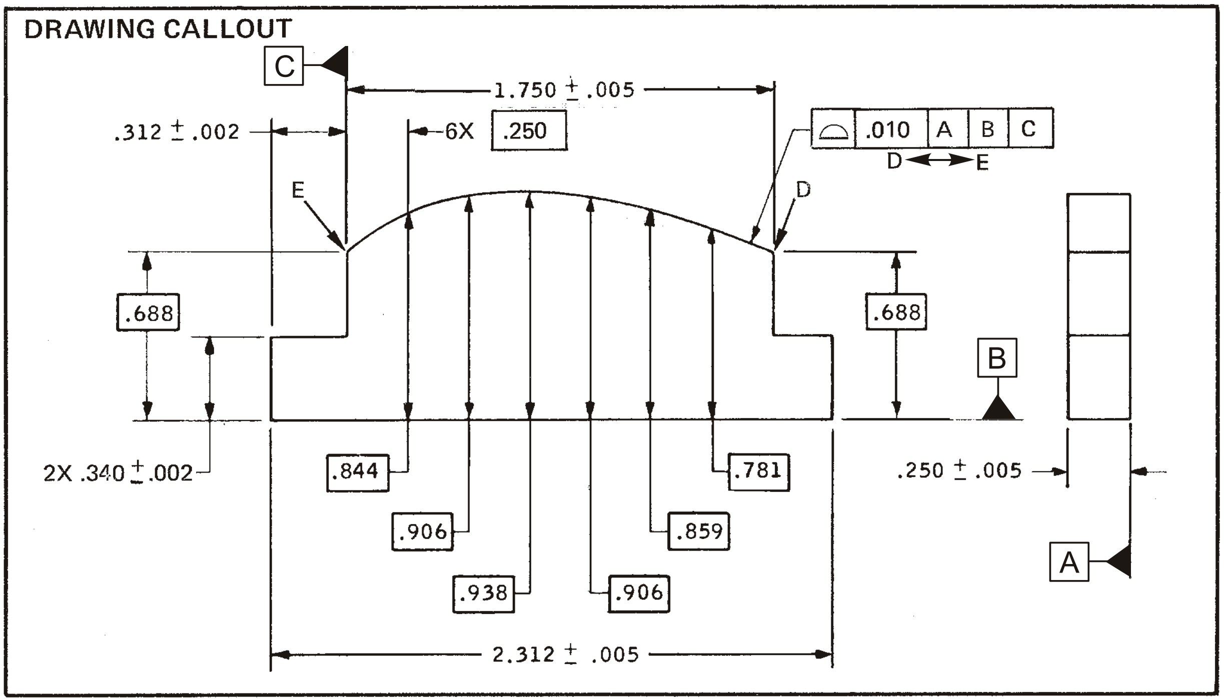

INCH	METRIC
.002	0.05
.005	0.13
.010	0.25
.250	6.35
.312	7.92
.340	8.64
.688	17.48
.781	19.84
.844	21.44
.859	21.82
.906	23.01
.938	23.82
1.750	44.45
2.312	58.72

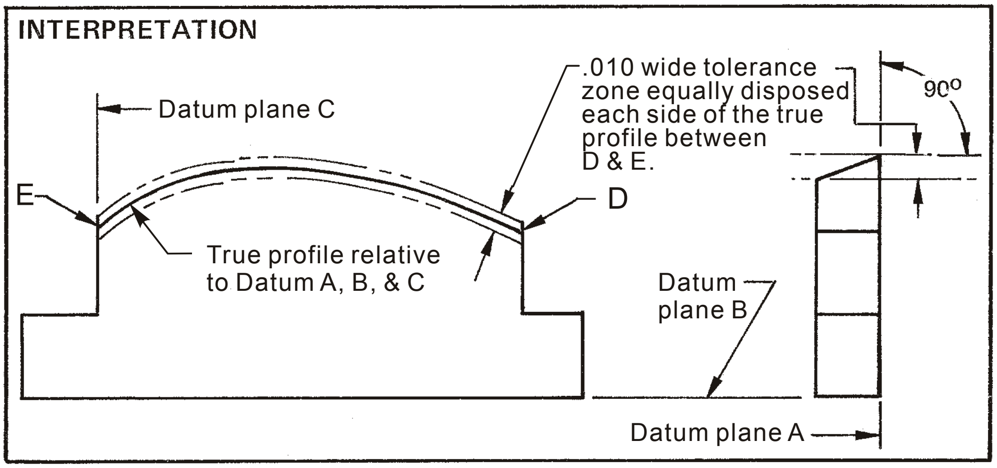

NOTE: The surface between points D and E must be between two profile boundaries, .010 apart perpendicular to Datum plane A, equally disposed about the true profile and positioned with respect to Datum planes B and C.

PROFILE OF A SURFACE
(USING BILATERAL TOLERANCE ZONE)
FIGURE 5-121

5.14.5.2 (Continued)

e. When the profile tolerance is bilateral but the profile tolerance is of unequal distribution on each side of the true profile, an exaggerated tolerance zone is shown by two phantom lines offset from the true profile and indicates the unequal amount of the distribution. See FIGURE 5-122.

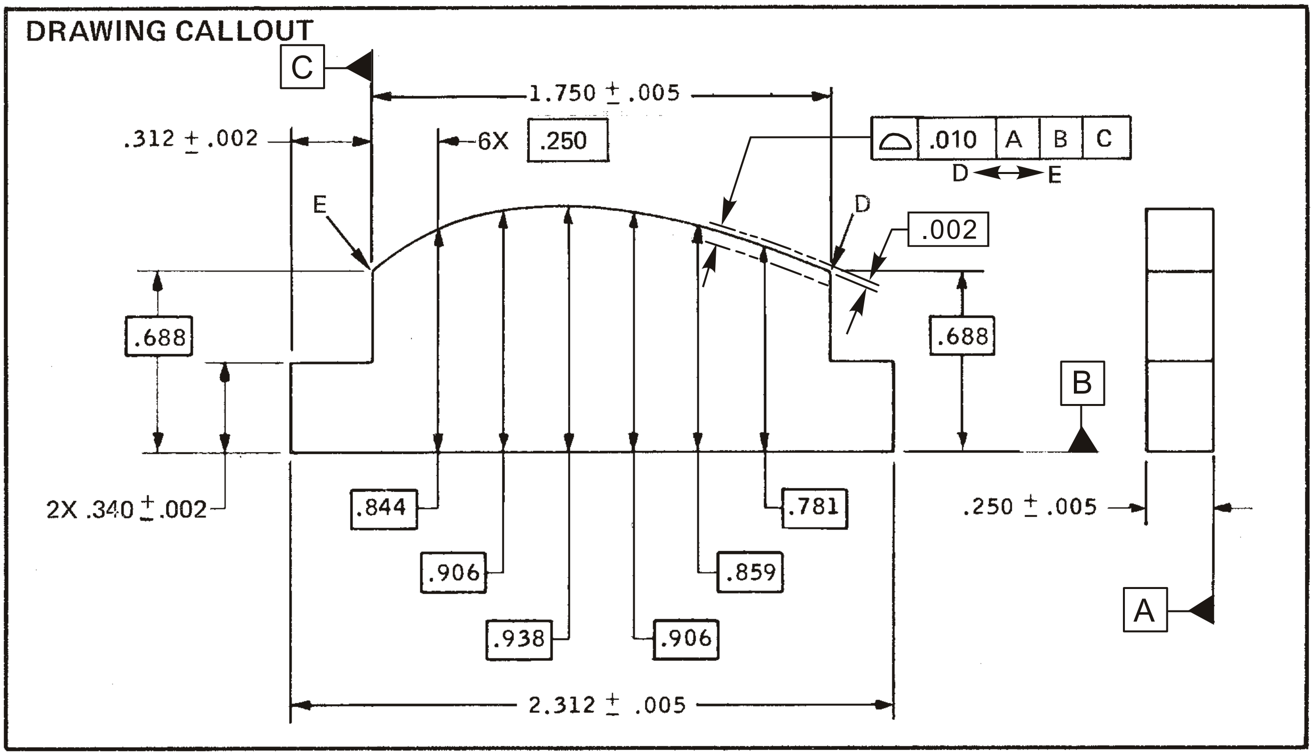

INCH	METRIC
.002	0.05
.005	0.13
.008	0.20
.010	0.25
.250	6.35
.312	7.92
.340	8.64
.688	17.48
.781	19.84
.844	21.44
.859	21.82
.906	23.01
.938	23.82
1.750	44.45
2.312	58.72

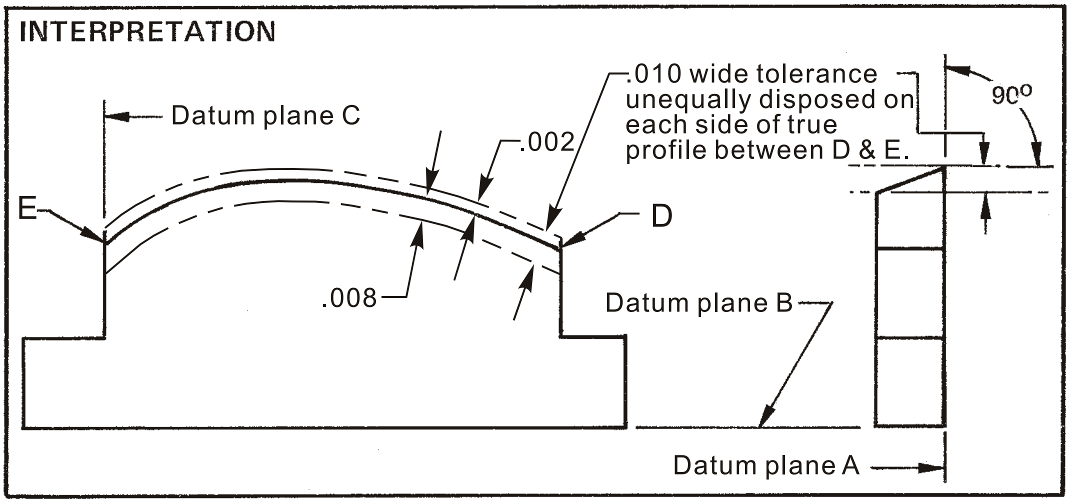

NOTE: The surface between points D and E must be between two profile boundaries, .010 apart perpendicular to Datum plane A, unequally disposed about the true profile and positioned with respect to Datum planes B and C.

PROFILE OF A SURFACE
(USING BILATERAL TOLERANCE ZONE WITH UNEQUAL DISTRIBUTION)
FIGURE 5-122

5.14.5.2 (Continued)

f. When a profile tolerance applies all around the profile of a part, the "all around" symbol is placed on the leader line extended from the feature control frame. See FIGURE 5-123. Further controls of profile tolerances include segments of a profile that have different tolerances similar to FIGURE 5-122. Profile tolerances may be further refined by another geometric tolerance.

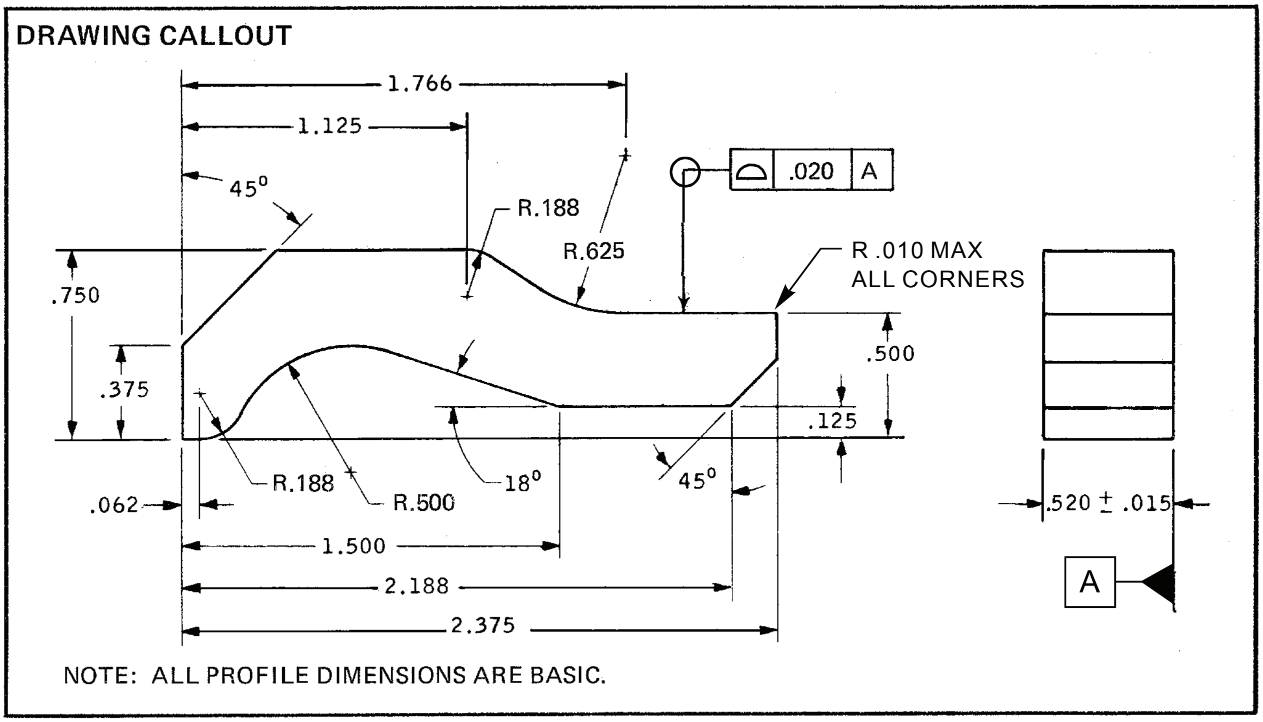

NOTE: ALL PROFILE DIMENSIONS ARE BASIC.

INCH	METRIC
.015	0.38
.010	0.25
.020	0.51
.062	1.57
.125	3.18
.188	4.78
.375	9.52
.500	12.70
.520	13.21
.625	15.88
.750	19.05
1.125	28.58
1.500	38.10
1.766	44.86
2.188	55.58
2.375	60.32

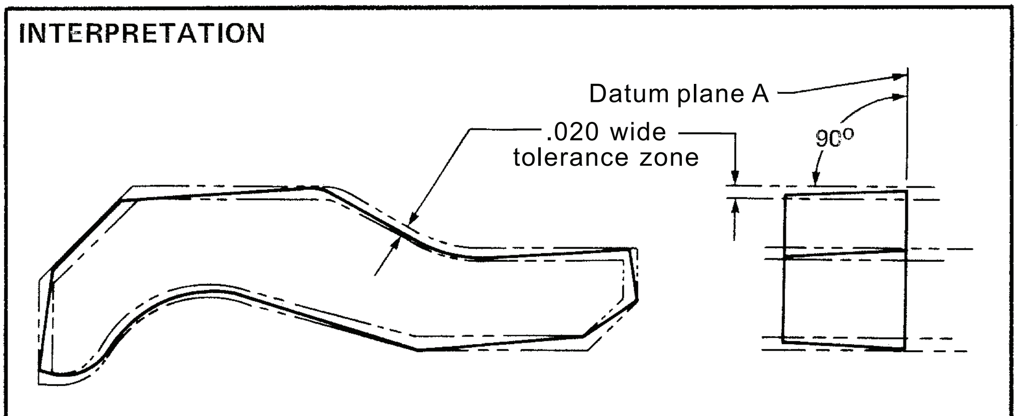

THE SURFACES ALL AROUND THE PART OUTLINE, MUST LIE BETWEEN TWO PARALLEL BOUNDRIES .020 APART PERPENDICULAR TO DATUM PLANE A AND EQUALLY DISPOSED ABOUT THE TRUE PROFILE. RADII OF PART CORNERS MUST NOT EXCEED .010.

PROFILE OF A SURFACE ALL AROUND
FIGURE 5-123

5.14.5.2 (Continued)

g. When a profile tolerance controls nominally coplanar surfaces (coplanarity), it is the condition where two or more surfaces which have all elements in one plane. If the profile of a surface tolerance is not related to a datum reference frame, then coplanarity is all that is being controlled, meaning only the form, orientation, and location of the surfaces relative to one another are being controlled; for example, see the profile tolerance applied to datum features A & B in FIGURE 5-124. The two leaders and the note "2 SURFACES" group the profile tolerance zone for each surface into a common zone, even though no datum features are referenced in the feature control frame. When more than two surfaces are involved, it may be desirable to designate specific surfaces as datum features. The profile tolerance applied to the two surfaces in the middle of the part in FIGURE 5-124 are related to primary datum A-B, thus the tolerance controls the form, orientation, and location of the features to datum plane A-B, as well as controlling the coplanarity of the surfaces to one another.

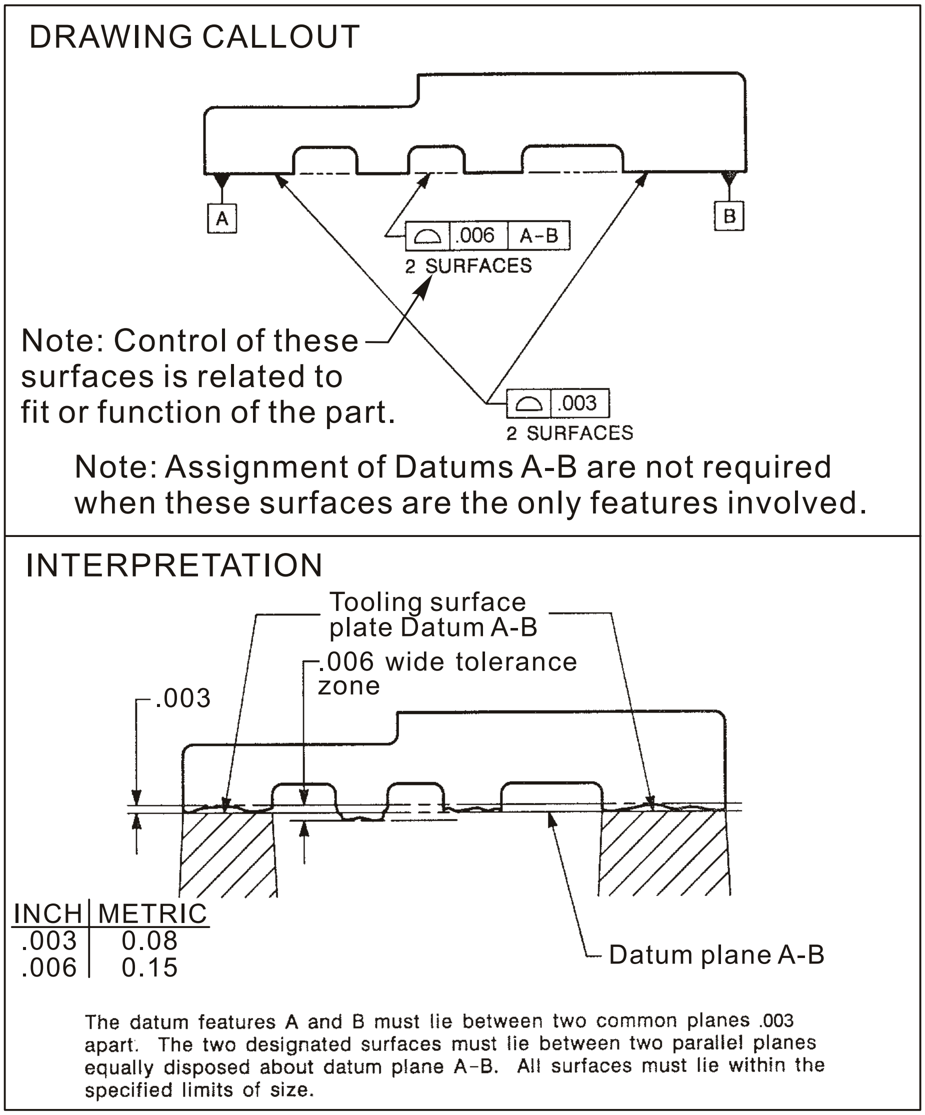

DRAWING CALLOUT

Note: Control of these surfaces is related to fit or function of the part.

Note: Assignment of Datums A-B are not required when these surfaces are the only features involved.

INTERPRETATION

INCH	METRIC
.003	0.08
.006	0.15

The datum features A and B must lie between two common planes .003 apart. The two designated surfaces must lie between two parallel planes equally disposed about datum plane A-B. All surfaces must lie within the specified limits of size.

PROFILE OF A SURFACE FOR COPLANAR SURFACES WITH AND WITHOUT A DATUM REFERENCE FRAME
FIGURE 5-124

5.14.5.2 (Continued)

h. A profile tolerance may be used to control a plane surface inclined to a datum reference frame to control form, orientation, and location. See FIGURE 5-124.1.

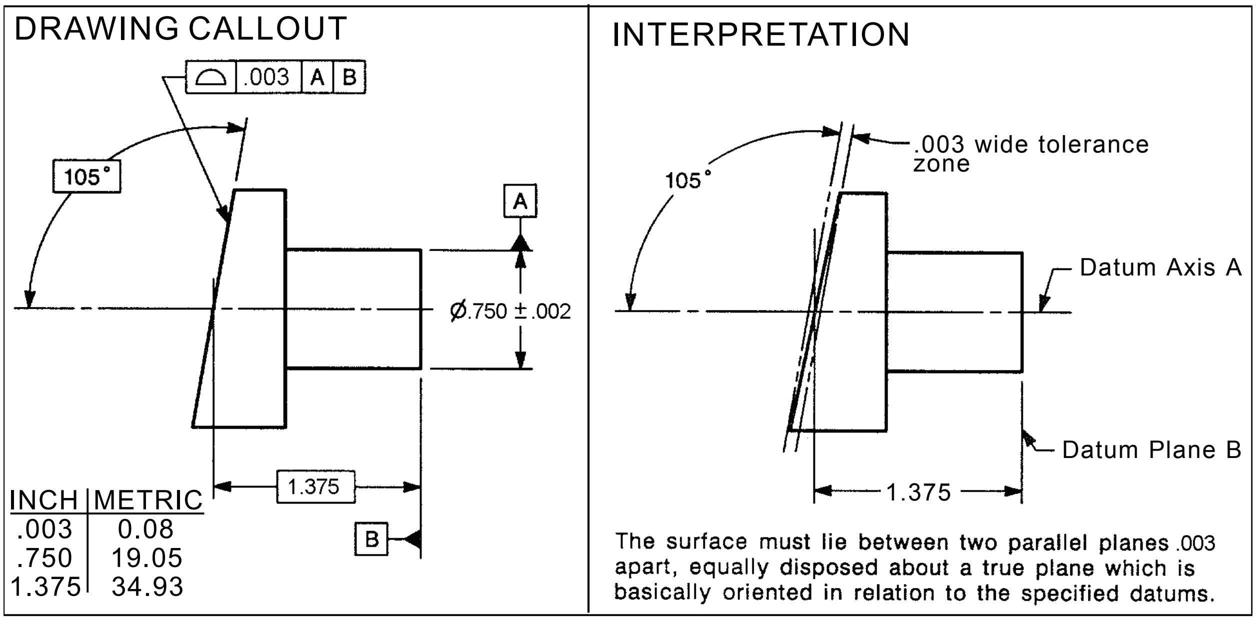

The surface must lie between two parallel planes .003 apart, equally disposed about a true plane which is basically oriented in relation to the specified datums.

PROFILE OF A SURFACE FOR A PLANE SURFACE
FIGURE 5-124.1

i. A profile tolerance may be used to control conicity of a surface as an independent control of form without the need to relate to datum features. See FIGURE 5-125. The feature must remain within the size limits.

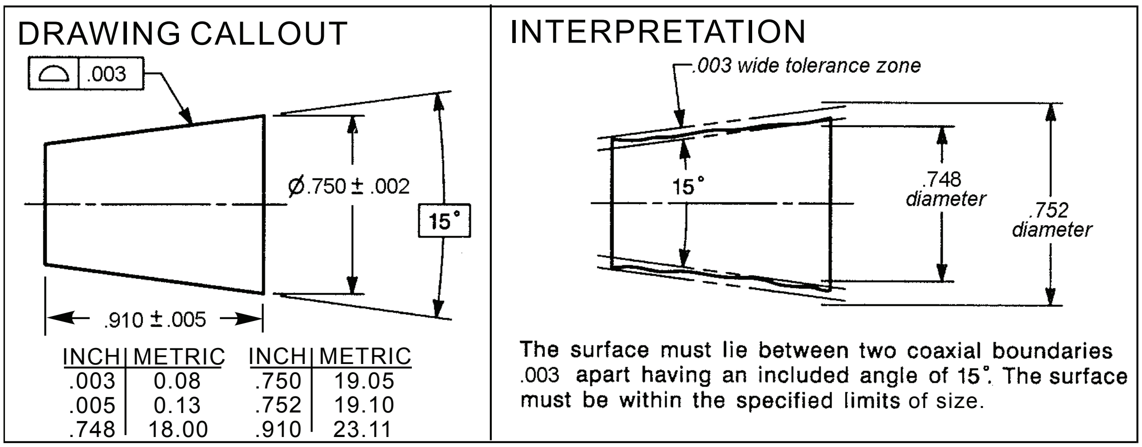

The surface must lie between two coaxial boundaries .003 apart having an included angle of 15°. The surface must be within the specified limits of size.

PROFILE OF CONICAL FEATURE
FIGURE 5-125

5.14.5.2 (Continued)

j. A profile of a surface tolerance may be used to control the size, form, orientation, and location of a conical surface (conicity). If the profile tolerance zone is not related to a datum reference frame, the tolerance may only control form and size of the conical surface. If the profile tolerance zone is related to a datum reference frame, the tolerance may control the form, size, orientation, and location of the conical surface. See FIGURE 5-126. In this instance the control is applied and oriented to a datum axis. The feature must remain within the limits of size.

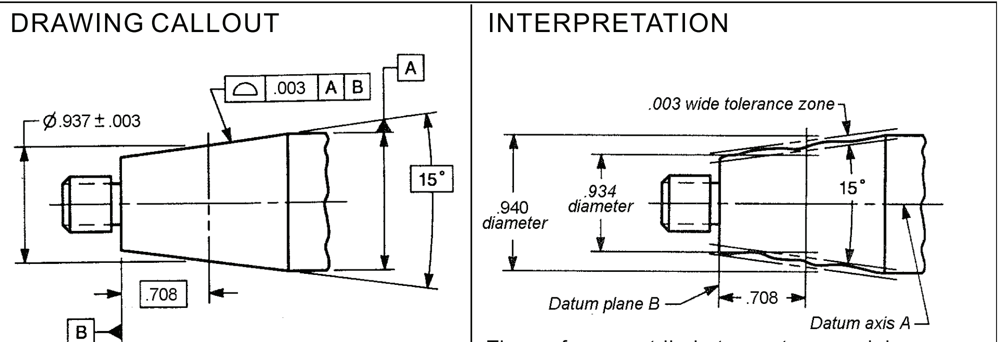

INCH	METRIC
.003	0.08
.708	17.98
.934	23.72
.937	23.80
.940	23.88

The surface must lie between two coaxial boundaries .003 apart having an included angle of 15°; the axis of the boundaries are coaxial with the datum axis A. The diameter of the conical surface at .708 from datum B may vary within a tolerance zone parallel to the 15° and bilateral to the .937 diameter within .003.

PROFILE TOLERANCING OF A CONICAL FEATURE, DATUM RELATED
FIGURE 5-126

5.14.6 Parallelism. Parallelism is the condition of a surface, axis, or line which is equidistant at all points from a datum plane or axis. Parallelism is an orientation tolerance and requires a datum reference frame.

5.14.6.1 Parallelism Tolerance. A parallelism tolerance specifies one of the following:

a. A tolerance zone bounded by two planes parallel to a datum plane or axis within which the considered feature (surface or axis) must lie. See FIGURES 5-127 and 5-129.

b. A cylindrical tolerance zone parallel to a datum plane or axis within which the considered axis of a feature must lie. See FIGURE 5-130.

NOTE: The parallelism tolerance when applied to a plane surface controls flatness if a flatness tolerance is not specified.

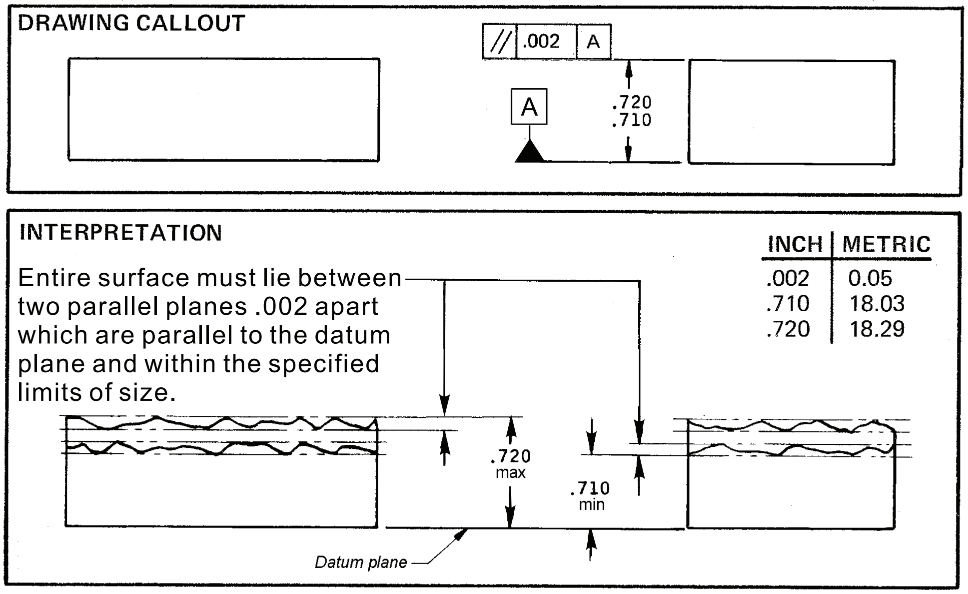

Entire surface must lie between two parallel planes .002 apart which are parallel to the datum plane and within the specified limits of size.

INCH	METRIC
.002	0.05
.710	18.03
.720	18.29

PARALLELISM OF A FEATURE SURFACE TO A DATUM PLANE
FIGURE 5-127

5.14.6.2 Tangent Plane. A tangent plane is established by contacting the high points of a surface. The following example shows a parallelism tolerance that controls a tangent plane.

a. **Tangent Plane Tolerance (Parallelism Example).** A plane contacting the high points of the surface shall lie on or within two parallel planes separated by the specified tolerance. The surface must be within the specified limits of size as shown in FIGURE 5-127. The tangent plane symbol is placed in the feature control frame following the stated tolerance. See FIGURE 5-128.

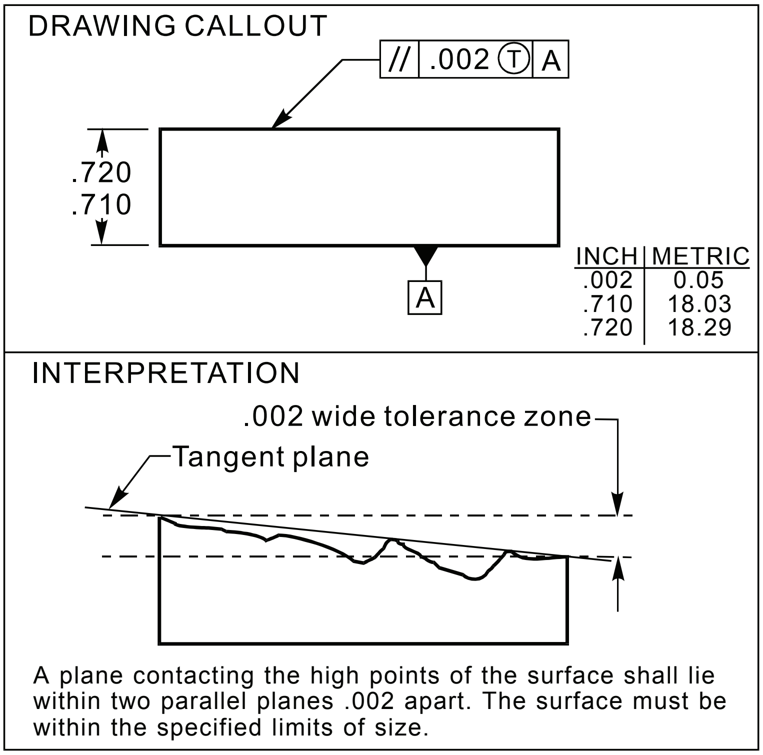

A plane contacting the high points of the surface shall lie within two parallel planes .002 apart. The surface must be within the specified limits of size.

TANGENT PLANE CONTROL
FIGURE 5-128

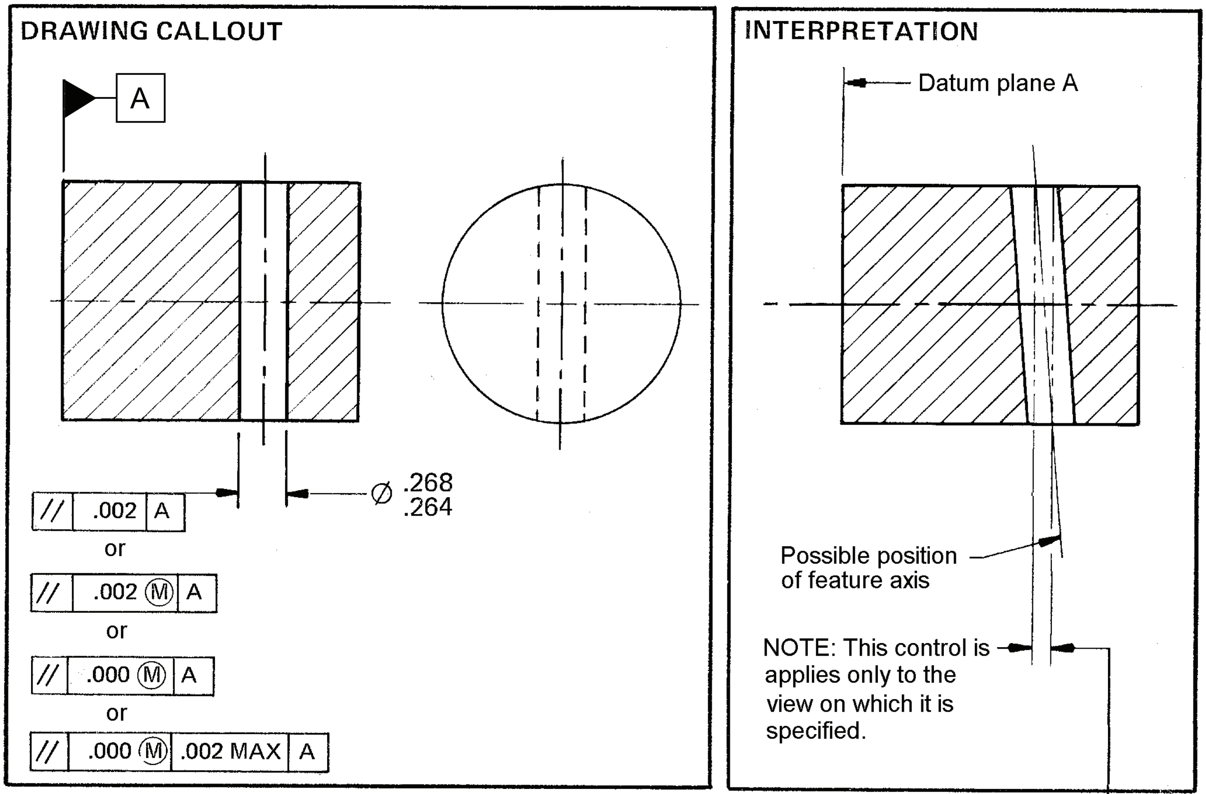

INCH	METRIC
.000	0
.002	0.05
.264	6.70
.268	6.81

	SYMBOL	PARALLELISM TOLERANCE WIDTH ALLOWED				
	FEATURE SIZE	.264	.265	.266	.267	.268
INCH	// .002 A	.002	←		→	.002
	// .002 Ⓜ A	.002	.003	.004	.005	.006
	// .000 Ⓜ A	.000	.001	.002	.003	.004
	// .000 Ⓜ .002 MAX A	.000	.001	.002	.002	.002

	SYMBOL	PARALLELISM TOLERANCE WIDTH ALLOWED				
	FEATURE SIZE	6.70	6.73	6.76	6.78	6.81
METRIC	// 0.05 A	0.05	←		→	0.05
	// 0.05 Ⓜ A	0.05	0.08	0.10	0.13	0.15
	// 0 Ⓜ A	0	0.025	0.05	0.08	0.10
	// 0 Ⓜ 0.05 MAX A	0	0.025	0.05	0.05	0.05

PARALLELISM OF A FEATURE AXIS TO A DATUM PLANE
FIGURE 5-129

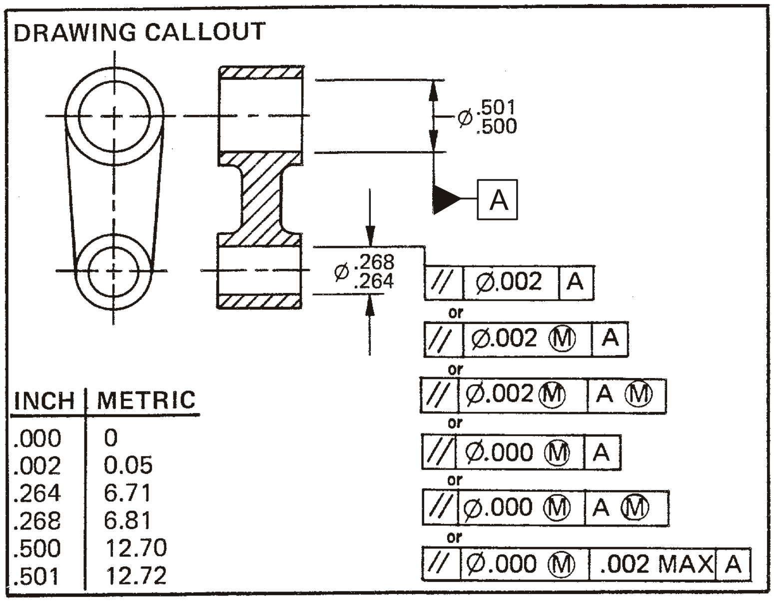

INCH	METRIC
.000	0
.002	0.05
.264	6.71
.268	6.81
.500	12.70
.501	12.72

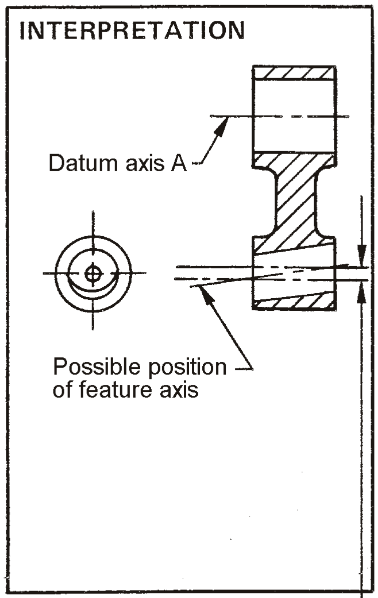

	SYMBOL	DATUM FEATURE SIZE	PARALLELISM TOLERANCE DIAMETER ALLOWED									
			.500					.501				
		FEATURE SIZE	.264	.265	.266	.267	.268	.264	.265	.266	.267	.268
INCH	// ∅.002 A		.002	←							→	.002
	// ∅.002 Ⓜ A		.002	.003	.004	.005	.006	.002	.003	.004	.005	.006
	// ∅.002 Ⓜ A Ⓜ		.002	.003	.004	.005	.006	.002	.003	.004	.005	.006
	// ∅.000 Ⓜ A		.000	.001	.002	.003	.004	.000	.001	.002	.003	.004
	// ∅.000 Ⓜ A Ⓜ		.000	.001	.002	.003	.004	.000	.001	.002	.003	.004
	// ∅.000 Ⓜ .002 MAX A		.000	.001	.002	.002	.002	.000	.001	.002	.002	.002

	SYMBOL	DATUM FEATURE SIZE	PARALLELISM TOLERANCE DIAMETER ALLOWED									
			12.70					12.72				
		FEATURE SIZE	6.71	6.73	6.76	6.78	6.81	6.71	6.73	6.76	6.78	6.81
METRIC	// ∅ 0.05 A		0.05	←							→	0.05
	// ∅ 0.05 Ⓜ A		0.05	0.08	0.10	0.13	0.15	0.05	0.08	0.10	0.13	0.15
	// ∅ 0.05 Ⓜ A Ⓜ		0.05	0.08	0.10	0.13	0.15	0.05	0.08	0.10	0.13	0.15
	// ∅ 0 Ⓜ A		0	0.025	0.05	0.08	0.10	0	0.025	0.05	0.08	0.10
	// ∅ 0 Ⓜ A Ⓜ		0	0.025	0.05	0.08	0.10	0	0.025	0.05	0.08	0.13
	// ∅ 0 Ⓜ 0.05 MAX A		0	0.025	0.05	0.05	0.05	0	0.025	0.05	0.05	0.05

PARALLELISM OF A FEATURE AXIS TO A DATUM AXIS
FIGURE 5-130

Note: The size of an as-produced datum feature and its associated MMC or LMC modifier does not affect the size of a geometric tolerance zone. A datum feature reference accompanied by an MMC or LMC modifier affects datum feature simulation and leads to *datum feature shift*. Datum feature shift represents the amount a datum feature is allowed to move or rotate during the inspection process. Worst-case datum feature shift occurs when the difference in size between the datum feature and its datum feature simulator is greatest.

5.14.7 Perpendicularity. Perpendicularity is the condition of a surface, axis, or line which is at right angles to a datum plane or axis. Perpendicularity is an orientation tolerance and requires a datum reference frame.

5.14.7.1 Perpendicularity Tolerance. A perpendicularity tolerance specifies one of the following:

a. A tolerance zone confined by two parallel planes perpendicular to a datum plane(s) within which the surface of a feature must lie. See FIGURE 5-131.

b. A tolerance zone confined by two parallel planes perpendicular to a datum plane within which the center plane of a feature must lie. See FIGURE 5-132.

c. A cylindrical tolerance zone perpendicular to a datum plane within which the axis of the feature must lie. See FIGURES 5-133, thru 5-136.

d. A tolerance zone confined by two parallel planes perpendicular to a datum axis within which the axis of a feature must lie. See FIGURE 5-137.

e. A tolerance zone confined by two parallel straight lines perpendicular to a datum plane or datum axis within which an element of the surface must lie. See FIGURE 5-138.

NOTE: A perpendicularity tolerance applied to a plane surface controls flatness if a more restrictive flatness tolerance is not specified.

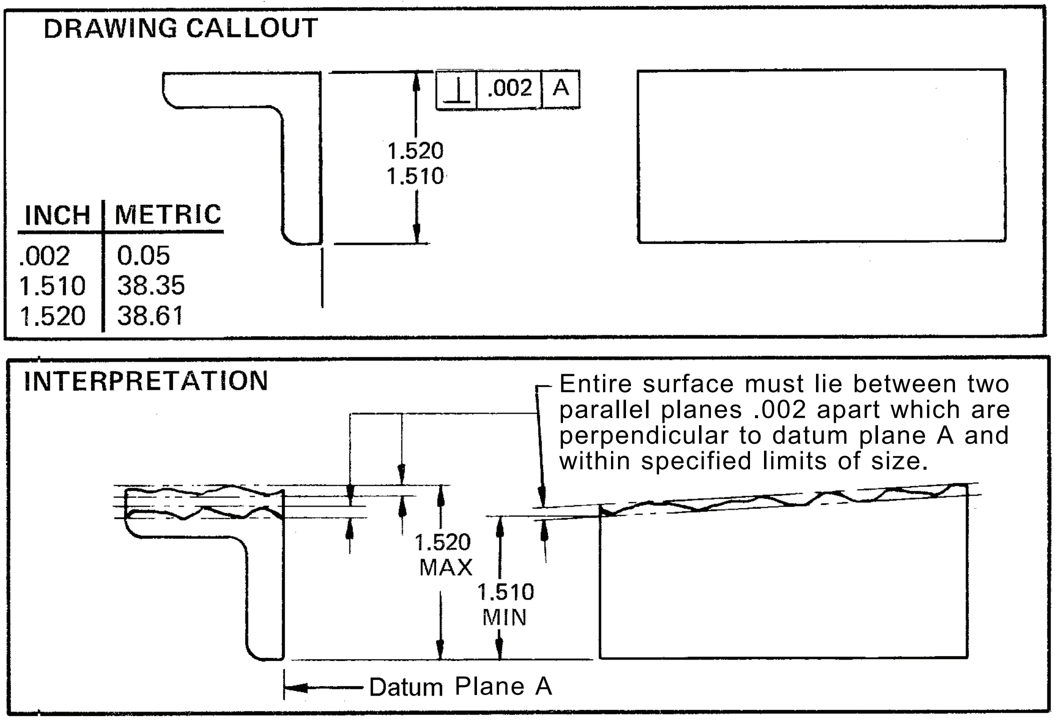

INCH	METRIC
.002	0.05
1.510	38.35
1.520	38.61

Entire surface must lie between two parallel planes .002 apart which are perpendicular to datum plane A and within specified limits of size.

PERPENDICULARITY OF A FEATURE SURFACE TO A DATUM PLANE
FIGURE 5-131

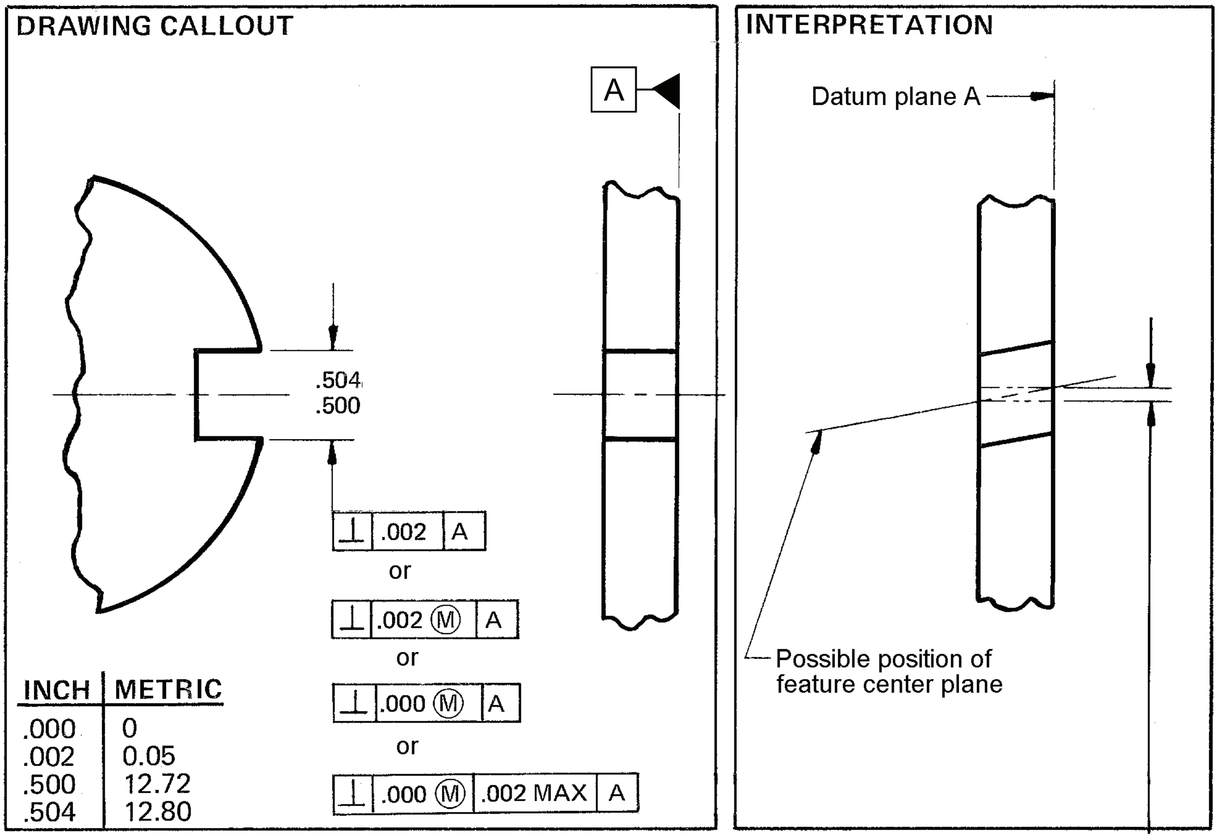

	SYMBOL	PERPENDICULARITY TOLERANCE WIDTH ALLOWED				
	FEATURE SIZE	.500	.501	.502	.503	.504
INCH	⊥ .002 A	.002	←		→	.002
	⊥ .002 Ⓜ A	.002	.003	.004	.005	.006
	⊥ .000 Ⓜ A	.000	.001	.002	.003	.004
	⊥ .000 Ⓜ .002 MAX A	.000	.001	.002	.002	.002

	SYMBOL	PERPENDICULARITY TOLERANCE WIDTH ALLOWED				
	FEATURE SIZE	12.70	12.72	12.75	12.78	12.80
METRIC	⊥ 0.05 A	0.05	←		→	0.05
	⊥ 0.05 Ⓜ A	0.05	0.08	0.10	0.13	0.15
	⊥ 0 Ⓜ A	0	0.025	0.05	0.08	0.10
	⊥ 0 Ⓜ 0.05 MAX A	0	0.025	0.05	0.05	0.05

PERPENDICULARITY OF A FEATURE CENTER PLANE TO A DATUM PLANE
FIGURE 5-132

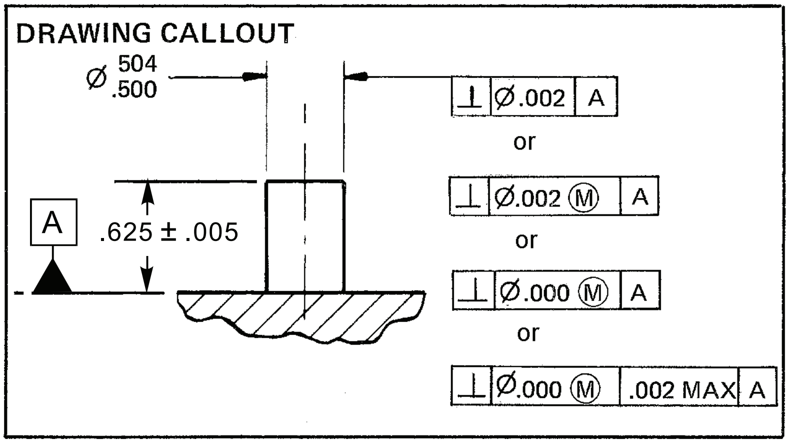

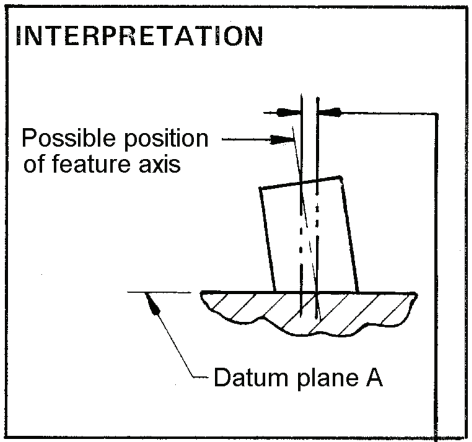

INCH	METRIC
.000	0
.002	0.05
.500	12.72
.504	12.80

INCH	SYMBOL	PERPENDICULARITY TOLERANCE DIA ALLOWED				
	FEATURE SIZE	.504	.503	.502	.501	.500
	⊥ | Ø.002 | A	.002	←		→	.002
	⊥ | Ø.002 Ⓜ | A	.002	.003	.004	.005	.006
	⊥ | Ø.000 Ⓜ | A	.000	.001	.002	.003	.004
	⊥ | Ø.000 Ⓜ | .002 MAX | A	.000	.001	.002	.002	.002

METRIC	SYMBOL	PERPENDICULARITY TOLERANCE DIA ALLOWED				
	FEATURE SIZE	12.80	12.78	12.75	12.72	12.70
	⊥ | Ø 0.05 | A	0.05	←		→	0.05
	⊥ | Ø0.05 Ⓜ | A	0.05	0.08	0.10	0.13	0.15
	⊥ | Ø 0 Ⓜ | A	0	0.025	0.05	0.08	0.10
	⊥ | Ø 0 Ⓜ | 0.05 MAX | A	0	0.025	0.05	0.05	0.05

PERPENDICULARITY OF A FEATURE AXIS TO A DATUM PLANE, FIXED PIN
FIGURE 5-133

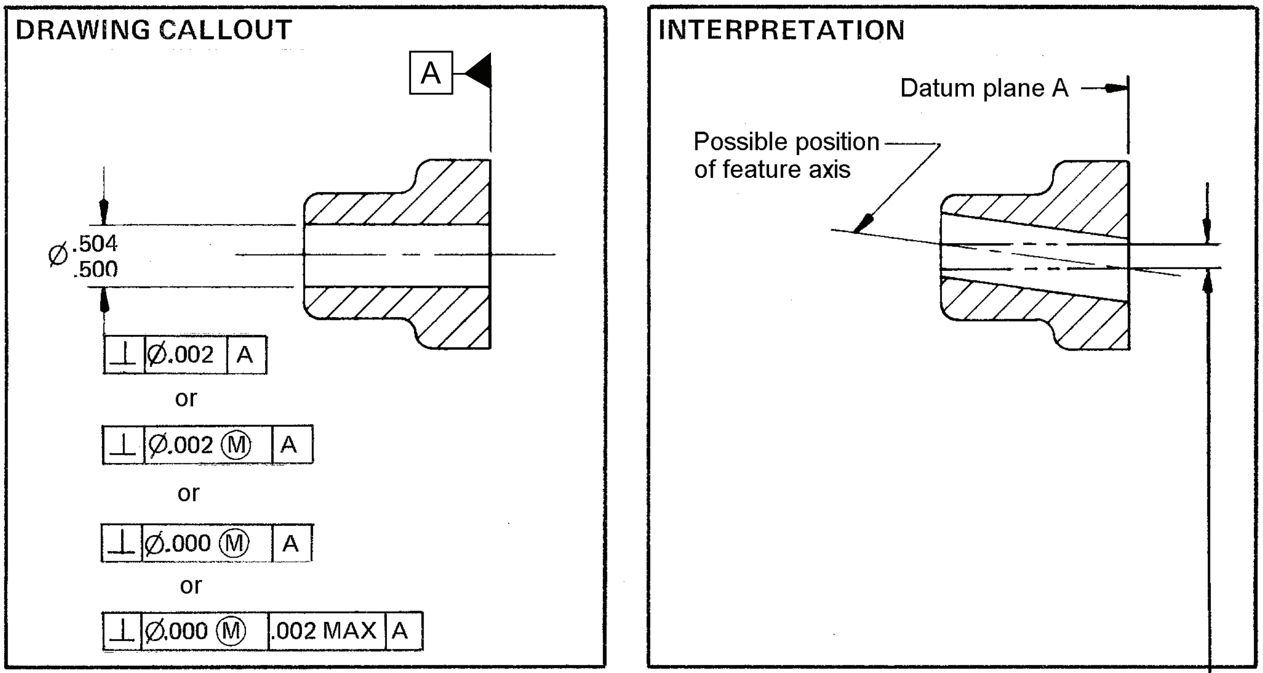

INCH

SYMBOL	PERPENDICULARITY TOLERANCE DIA ALLOWED				
FEATURE SIZE	.500	.501	.502	.503	.504
⊥ Ø.002 A	.002	←		→	.002
⊥ Ø.002 Ⓜ A	.002	.003	.004	.005	.006
⊥ Ø.000 Ⓜ A	.000	.001	.002	.003	.004
⊥ Ø.000 Ⓜ .002 MAX A	.000	.001	.002	.002	.002

INCH	METRIC
.000	0
.002	0.05
.500	12.72
.504	12.80

METRIC

SYMBOL	PERPENDICULARITY TOLERANCE DIA ALLOWED				
FEATURE SIZE	12.70	12.72	12.75	12.78	12.80
⊥ Ø0.05 A	0.05	←		→	0.05
⊥ Ø0.05 Ⓜ A	0.05	0.08	0.10	0.13	0.15
⊥ Ø 0 Ⓜ A	0	0.025	0.05	0.08	0.10
⊥ Ø 0 Ⓜ 0.05 MAX A	0	0.025	0.05	0.05	0.05

PERPENDICULARITY OF A FEATURE AXIS TO A DATUM PLANE
FIGURE 5-134

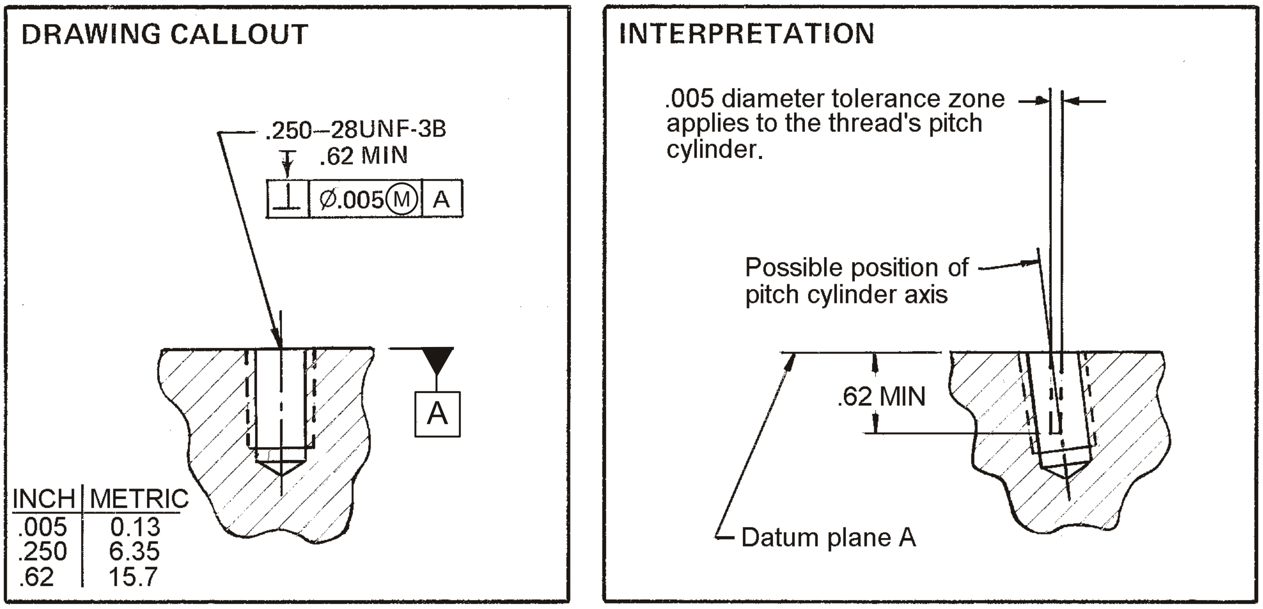

INCH	METRIC
.005	0.13
.250	6.35
.62	15.7

PERPENDICULARITY OF THREADED HOLES AND/OR INSERTS
FIGURE 5-135

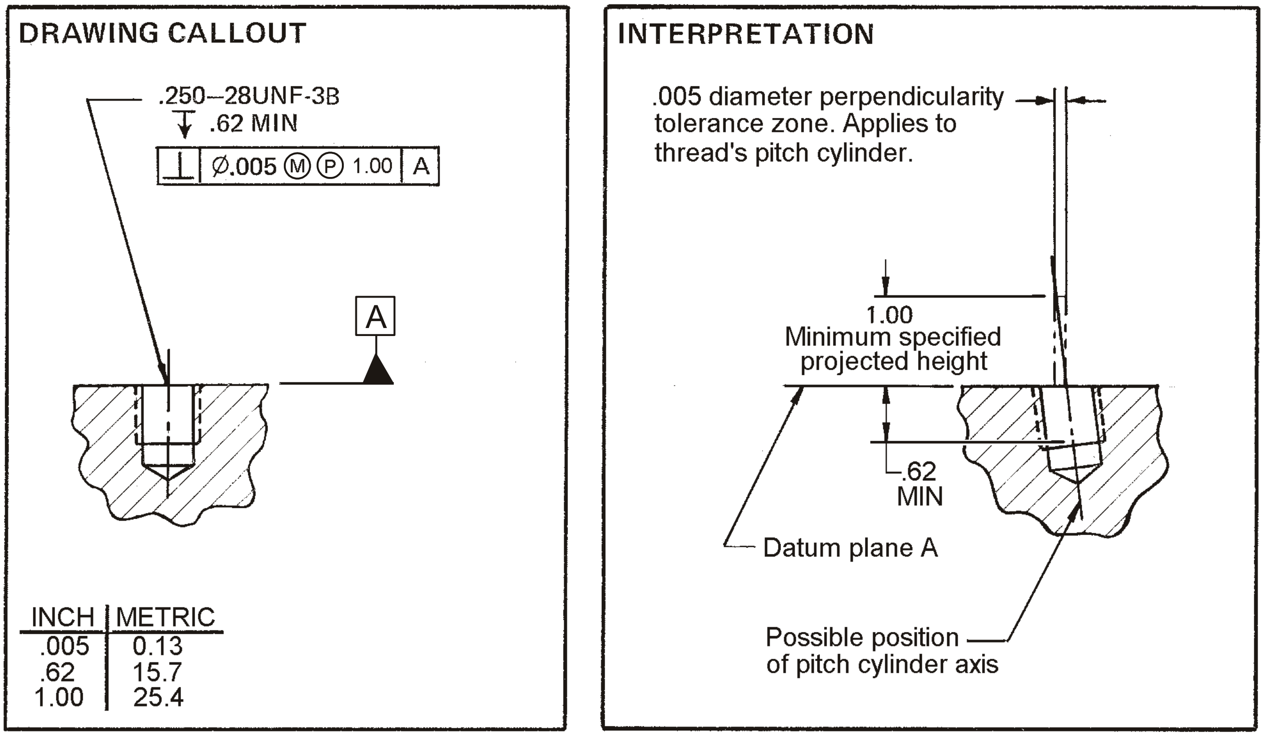

INCH	METRIC
.005	0.13
.62	15.7
1.00	25.4

PERPENDICULARITY OF THREADED HOLES AND/OR INSERTS
PROJECTED TOLERANCE ZONE
FIGURE 5-136

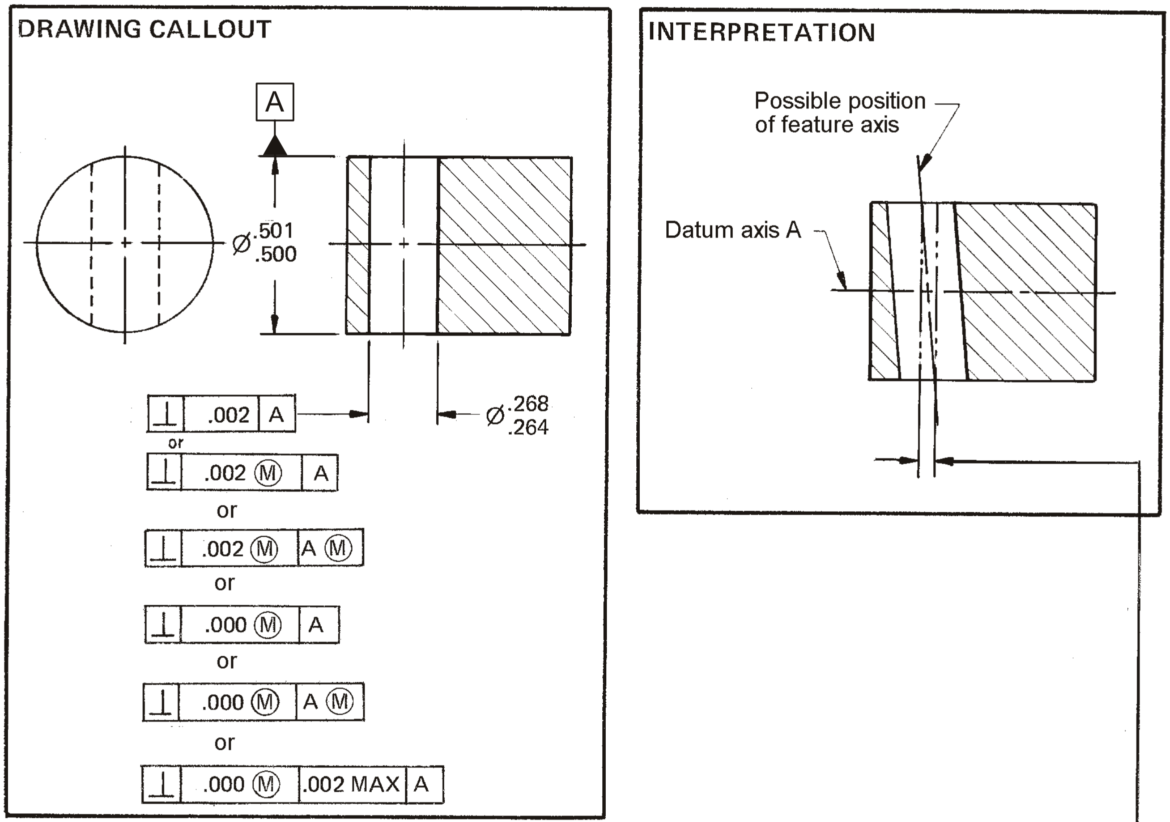

INCH	METRIC
.000	0
.002	0.05
.264	6.71
.268	6.81
.500	12.70
.501	12.72

INCH

SYMBOL	PERPENDICULARITY TOLERANCE WIDTH ALLOWED									
DATUM FEATURE SIZE	.501					.500				
	.264	.265	.266	.267	.268	.264	.265	.266	.267	.268
⊥ .002 A	.002 ←									→ .002
⊥ .002 Ⓜ A	.002	.003	.004	.005	.006	.002	.003	.004	.005	.006
⊥ .002 Ⓜ A Ⓜ	.002	.003	.004	.005	.006	.002	.003	.004	.005	.006
⊥ .000 Ⓜ A	.000	.001	.002	.003	.004	.000	.001	.002	.003	.004
⊥ .000 Ⓜ A Ⓜ	.000	.001	.002	.003	.004	.000	.001	.002	.003	.004
⊥ .000 Ⓜ 0.05MAX A	.000	.001	.002	.002	.002	.000	.001	.002	.002	.002

METRIC

SYMBOL	PERPENDICULARITY TOLERANCE WIDTH ALLOWED									
DATUM FEATURE SIZE	12.72					12.70				
	6.70	6.73	6.76	6.78	6.81	6.70	6.73	6.76	6.78	6.81
⊥ 0.05 A	0.05 ←									→ 0.05
⊥ 0.05 Ⓜ A	0.05	0.08	0.10	0.13	0.15	0.05	0.08	0.10	0.13	0.15
⊥ 0.05 Ⓜ A Ⓜ	0.05	0.08	0.10	0.13	0.15	0.05	0.08	0.10	0.13	0.15
⊥ 0 Ⓜ A	0	0.025	0.05	0.08	0.10	0	0.025	0.05	0.08	0.10
⊥ 0 Ⓜ A Ⓜ	0	0.025	0.05	0.08	0.10	0	0.025	0.05	0.08	0.10
⊥ 0 Ⓜ 0.05 MAX A	0	0.025	0.05	0.05	0.05	0	0.025	0.05	0.05	0.05

PERPENDICULARITY OF A FEATURE AXIS TO A DATUM AXIS
FIGURE 5-137

Note: The size of an as-produced datum feature and its associated MMC or LMC modifier does not affect the size of a geometric tolerance zone. A datum feature reference accompanied by an MMC or LMC modifier affects datum feature simulation and leads to *datum feature shift*. Datum feature shift represents the amount a datum feature is allowed to move or rotate during the inspection process. Worst-case datum feature shift occurs when the difference in size between the datum feature and its datum feature simulator is greatest.

THIS PAGE INTENTIONALLY LEFT BLANK

FIGURE 5-138 - DELETED

5.14.8 Angularity. Angularity is the condition of a surface or line which is at the specified angle (other than 90°) from a datum plane or axis. Angularity is an orientation tolerance and requires a datum reference frame.

5.14.8.1 Angularity Tolerance of a Surface. An angularity tolerance for a surface specifies a tolerance zone confined by two parallel planes, inclined at the specified angle to a datum plane or axis, within which the toleranced surface must lie. See FIGURE 5-139. Note that the angularity tolerance when applied to a plane surface controls flatness if a flatness tolerance is not specified.

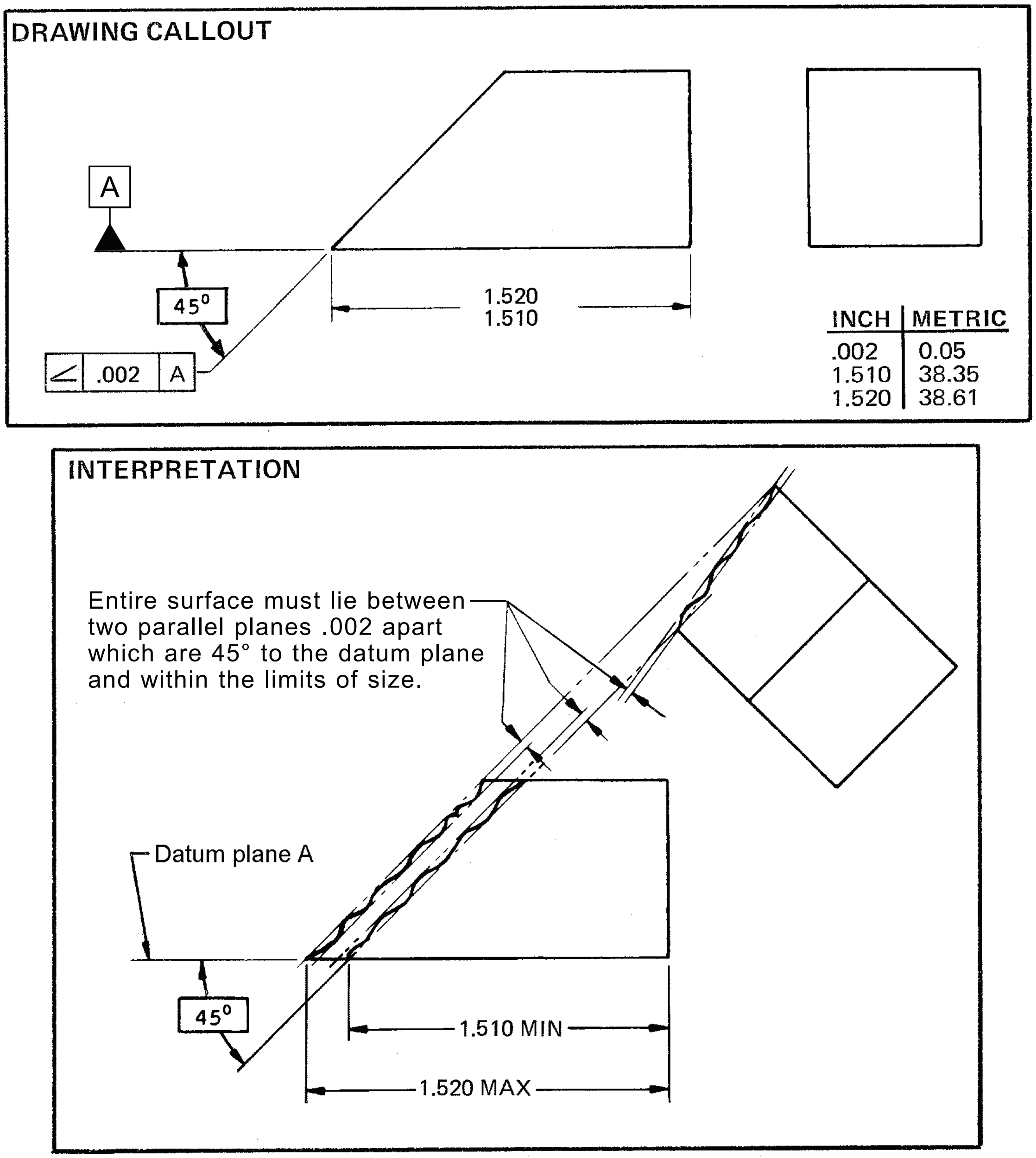

INCH	METRIC
.002	0.05
1.510	38.35
1.520	38.61

Entire surface must lie between two parallel planes .002 apart which are 45° to the datum plane and within the limits of size.

ANGULARITY
FIGURE 5-139

5.14.8.2 Angularity Tolerance For an Axis Relating to a Surface. An angularity tolerance for an axis tolerance zone is specified by two parallel planes, inclined at the specified basic angle from datum(s) plane or axis within which the axis of the feature must lie. See FIGURE 5-140.

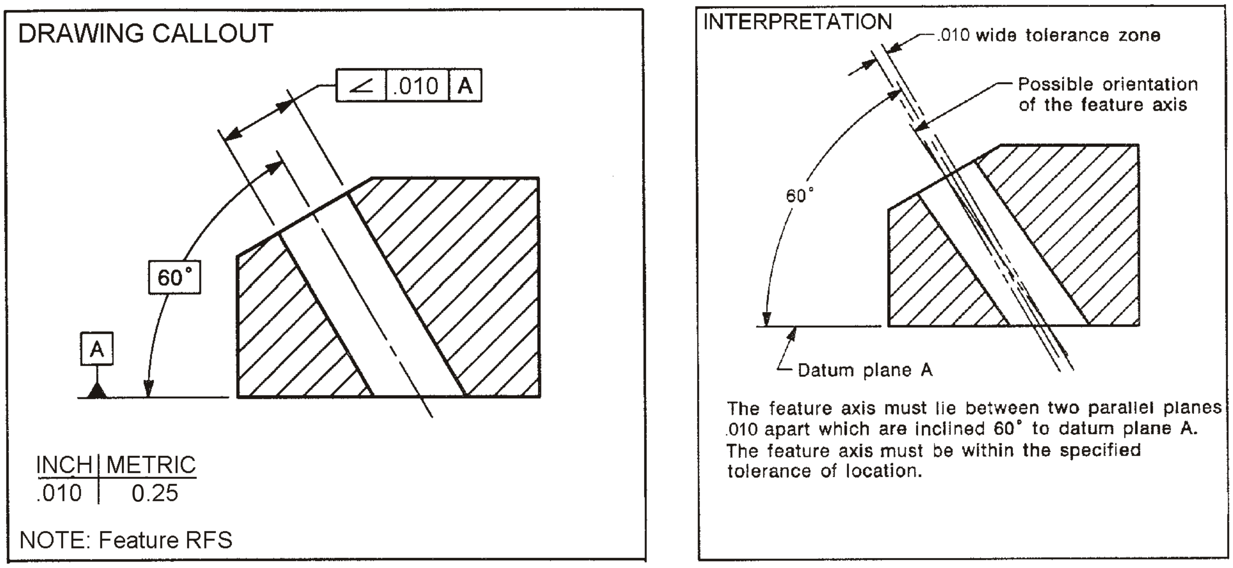

The feature axis must lie between two parallel planes .010 apart which are inclined 60° to datum plane A. The feature axis must be within the specified tolerance of location.

ANGULARITY FOR AN AXIS RELATING TO A SURFACE
FIGURE 5-140

5.14.8.3 Angularity Tolerance For an Axis Relating to a Cylindrical Tolerance Zone. A cylindrical angularity tolerance zone for an axis is and is specified by the addition of the diameter symbol in the feature control frame. The tolerance zone is inclined at the specified basic angle from a datum(s) plane or axis, within which the axis of the feature must lie. See FIGURE 5-141.

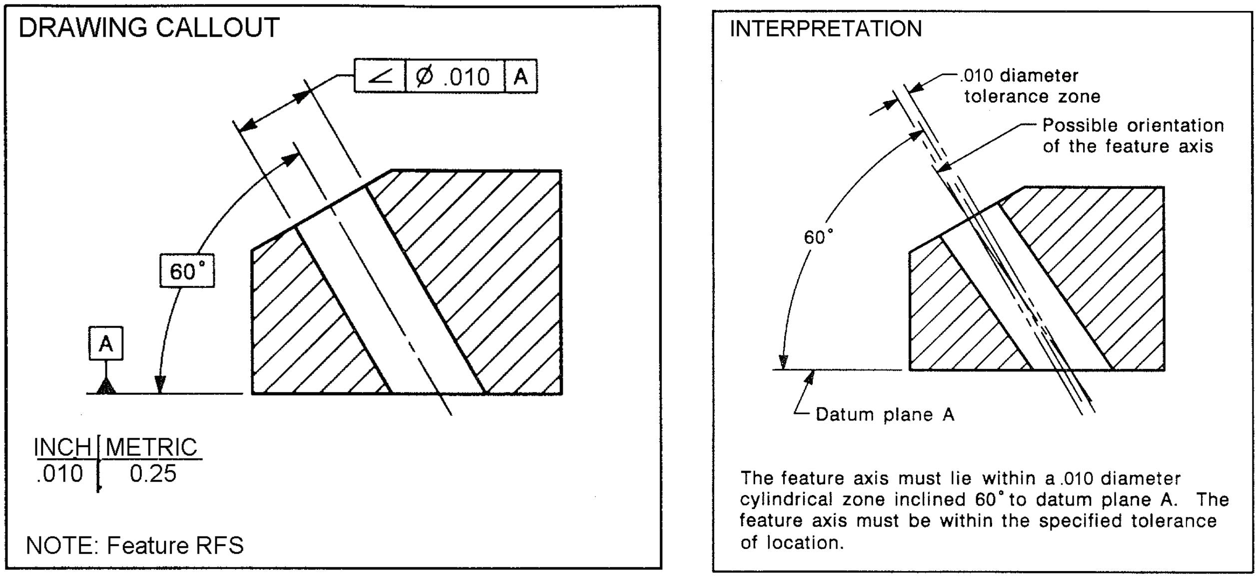

The feature axis must lie within a .010 diameter cylindrical zone inclined 60° to datum plane A. The feature axis must be within the specified tolerance of location.

ANGULARITY FOR AN AXIS RELATION TO CYLINDRICAL TOLERANCE ZONE
FIGURE 5-141

5.14.9 Runout. Runout controls the relationship between two or more surfaces of revolution such as cylinders, cones, or contours and may include plane surfaces perpendicular to and generated about a common axis. Runout requires a datum axis or center point.

5.14.9.1 Runout Tolerance Control. A runout tolerance controls the relationship of two or more features within the allowable errors of concentricity, perpendicularity, and alignment of the features. It also controls variations in roundness, straightness, flatness, angularity, and parallelism of individual surfaces. In essence, runout establishes composite form control of those features of a part having a common datum axis. Where a combination of surfaces of revolution is cylindrical or conical relative to a common datum axis, or spherical relative to a common data point, a runout tolerance is recommended. Circular runout and total runout are applicable on a RFS basis only and cannot be modified to MMC or LMC because runout controls the surface elements of a feature.

5.14.9.2 Selection Of Runout Datums. To control the relationship of features, it is necessary to establish a datum axis or center point about which the features are to be rotated. This axis may be established by a diameter of considerable length, two diameters having considerable axial separation, or a diameter and a surface which is at right angles to it. Insofar as possible, surfaces used as datum features for establishing axes should be functional and must be accessible during inspection. Pitch diameters of features should be avoided as datum features for runout.

5.14.9.3 Interpretation Of Runout Tolerances. FIGURE 5-142 illustrates the interpretation of runout tolerances. Measurements are taken under a single setup for all runout tolerances related to a common axis. However, features that are functionally related to each other and not to the common axis may be toleranced to reflect this requirement. See FIGURE 5-144. Any two features on a common axis which are individually within their specified runout tolerance are related to each other within the sum of their runout tolerances. Therefore, to ensure 100% interchangeability, the sum of the runout tolerances of two mating diameters shall not exceed the clearance of the diameters at MMC.

5.14.9.4 Application Of Runout Tolerances. FIGURES 5-142 through 5-147 illustrate various methods of specifying datum axes and applying runout tolerances.

5.14.9.5 Circular Runout. Circular runout controls the allowable surface variation for each cross-section of a feature as the part is rotated about a datum axis or center point. Although circular runout applies to the entire feature, runout controls each circular element of the surface individually rather than the entire surface simultaneously. When circular runout is to be applied at a specific location, it may be specified on a between points basis or by applying a chain line adjacent to the surface profile as shown in See FIGURE 5-142. Circular runout may control form, orientation, and location as applicable.

INCH	METRIC
.001	0.025

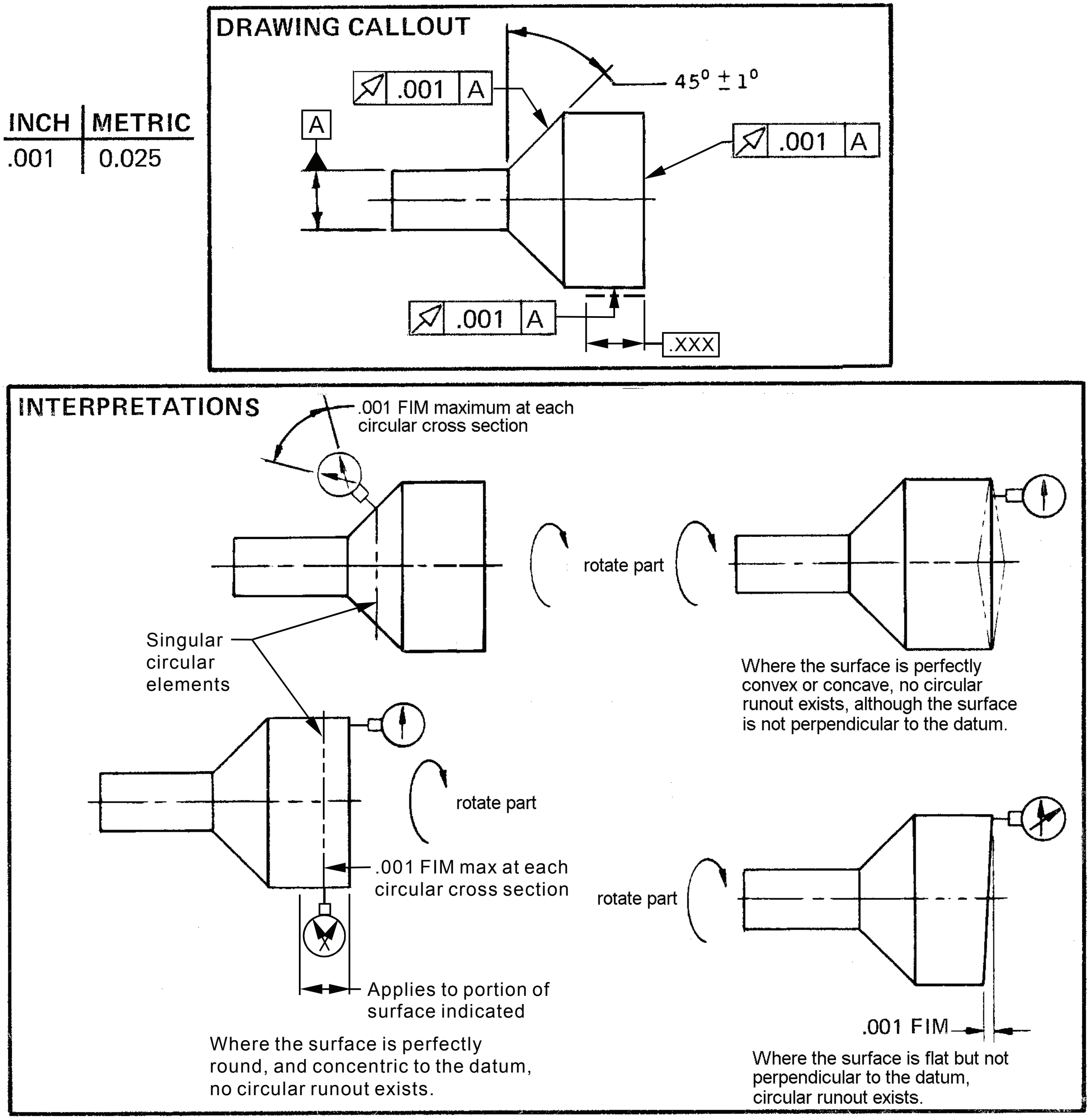

CIRCULAR RUNOUT
FIGURE 5-142

Note: Runout tolerances may be applied to surfaces of revolution that include less than 360° of surface, such as a half-round shape, a shaft with a keyway or cross-drilled hole, the OD of a spline surface or gear, etc.

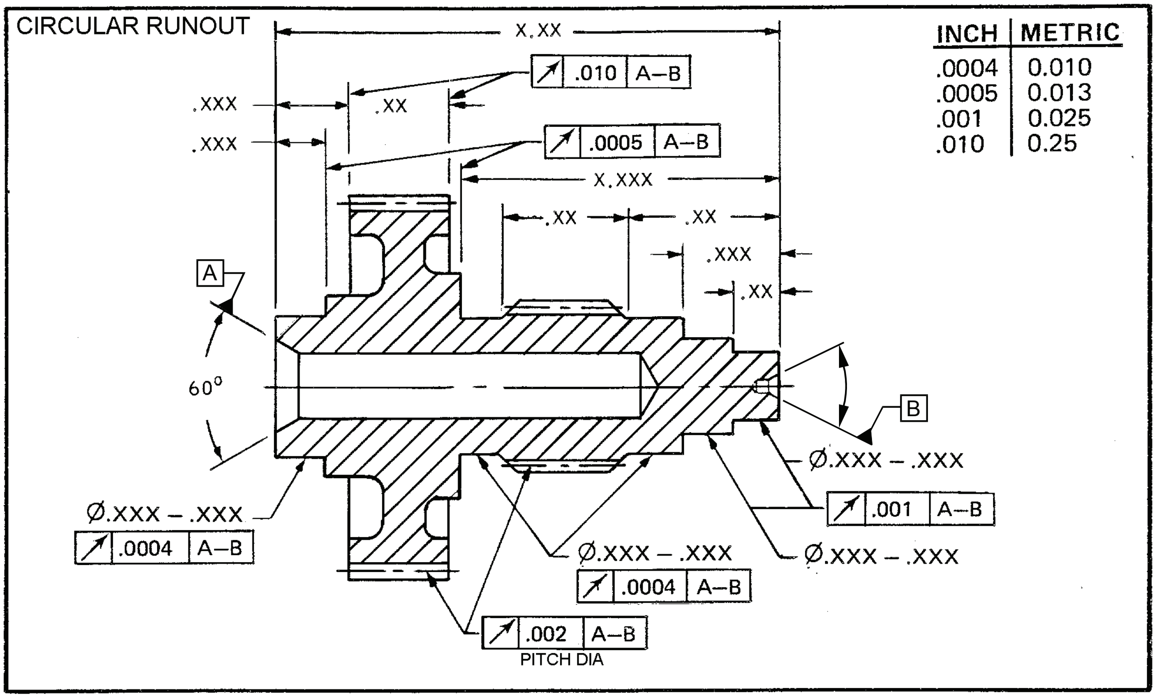

INCH	METRIC
.0004	0.010
.0005	0.013
.001	0.025
.010	0.25

PART MOUNTED ON MACHINING CENTERS
FIGURE 5-143

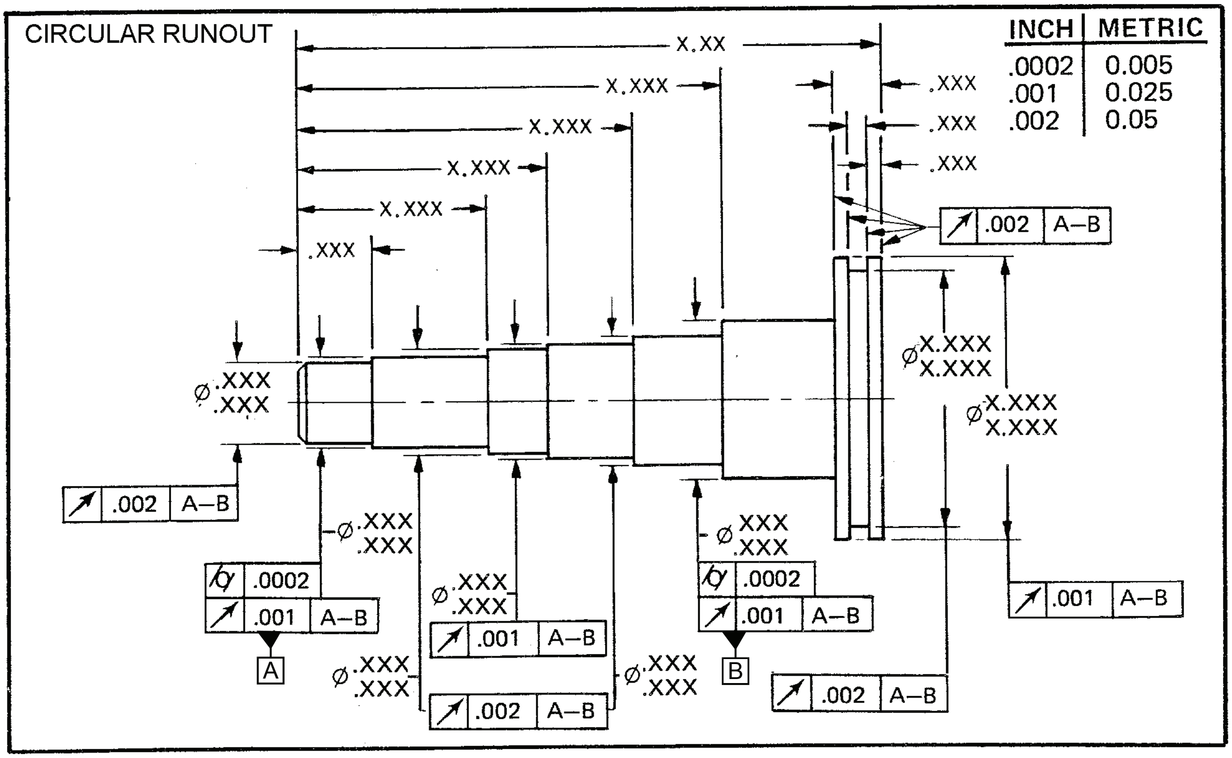

INCH	METRIC
.0002	0.005
.001	0.025
.002	0.05

PART MOUNTED ON TWO BEARING SURFACES
FIGURE 5-144

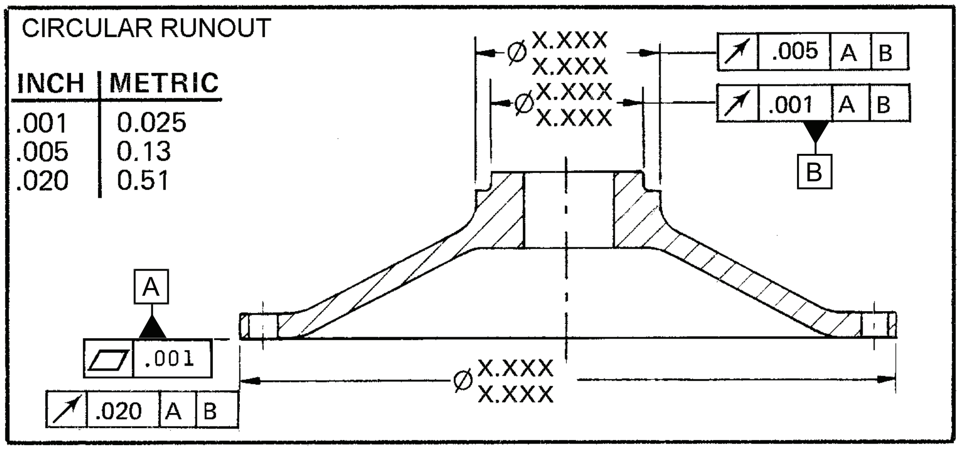

INCH	METRIC
.001	0.025
.005	0.13
.020	0.51

PART MOUNTED ON LARGE FLAT SURFACE WITH NARROW FINISHED DIAMETER
FIGURE 5-145

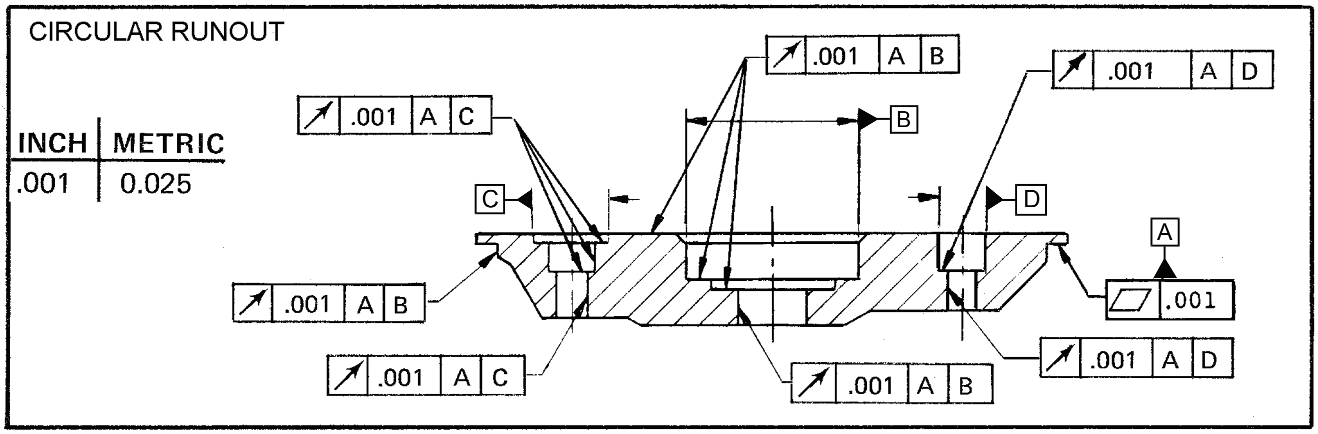

INCH	METRIC
.001	0.025

PART MOUNTED ON LARGE FLAT SURFACE WITH MULTIPLE COMMON AXIS
FIGURE 5-146

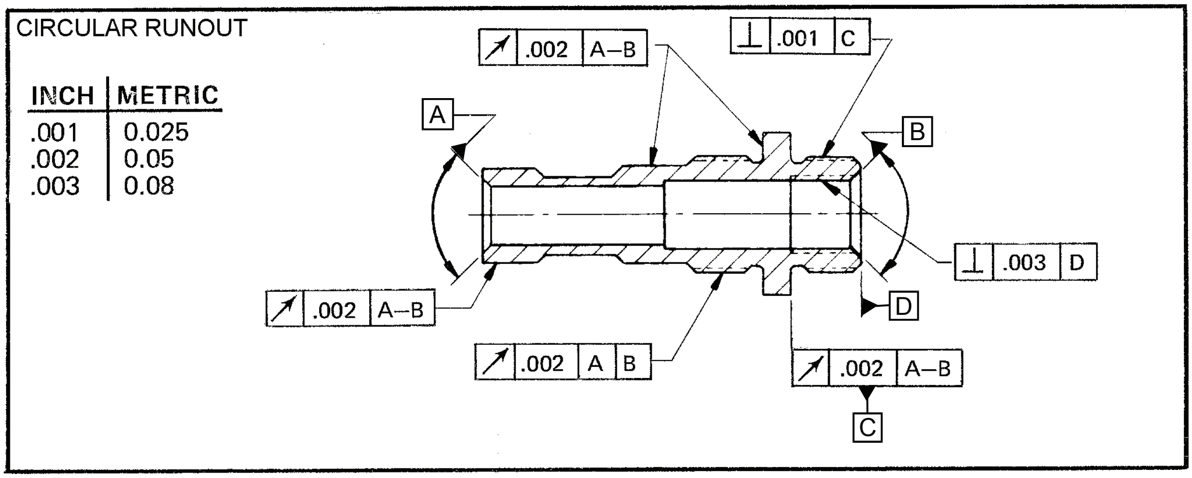

INCH	METRIC
.001	0.025
.002	0.05
.003	0.08

PART MOUNTED ON TAPERED SURFACE
FIGURE 5-147

5.14.9.6 Total Runout. Total runout controls the allowable surface variation for a feature as the part is rotated about a datum axis or center point. Total runout applies to the entire feature, and controls the entire surface simultaneously. Total runout may control form, orientation, and location as applicable. Total runout is indicated by the total runout symbol within the feature control frame. See FIGURE 5-148.

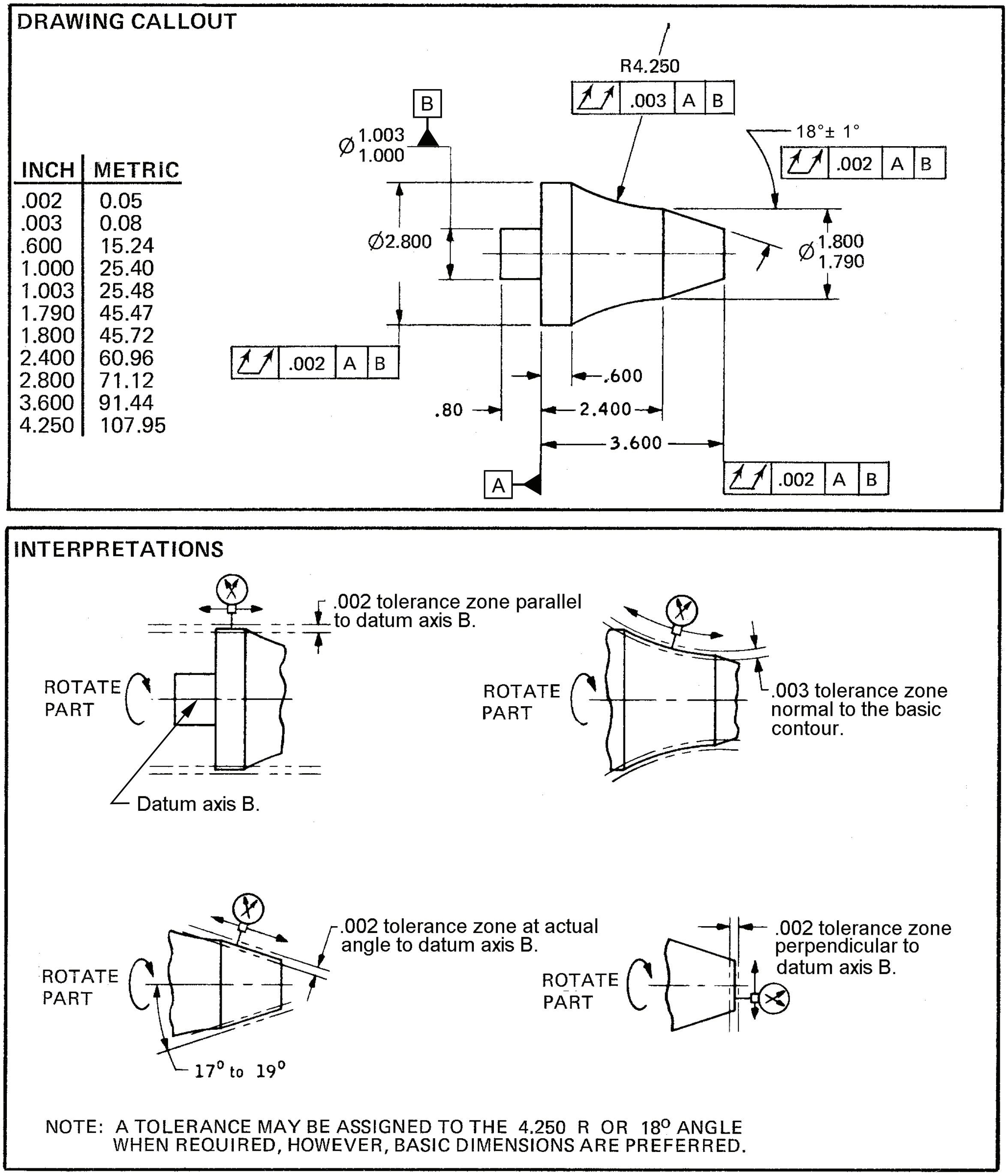

INCH	METRIC
.002	0.05
.003	0.08
.600	15.24
1.000	25.40
1.003	25.48
1.790	45.47
1.800	45.72
2.400	60.96
2.800	71.12
3.600	91.44
4.250	107.95

NOTE: A TOLERANCE MAY BE ASSIGNED TO THE 4.250 R OR 18° ANGLE WHEN REQUIRED, HOWEVER, BASIC DIMENSIONS ARE PREFERRED.

INTERPRETATION OF TOTAL RUNOUT TOLERANCE ZONES
FIGURE 5-148

Note: Runout tolerances may be applied to surfaces of revolution that include less than 360° of surface, such as a half-round shape, a shaft with a keyway or cross-drilled hole, the OD of a spline surface or gear, etc

5.14.10 Concentricity. Concentricity is the condition where the median point of each opposed point pair on a round surface of revolution (cylinder, cone, sphere, etc.) is congruent with a datum axis or center point. The specified tolerance and datum feature references may only be applied on an RFS basis. Concentricity is a location tolerance and requires a datum reference frame.

5.14.10.1 Concentricity Tolerance. A concentricity tolerance zone must be cylindrical or spherical (i.e. specified with a diameter or spherical diameter symbol). The median point of each opposed point pair of the toleranced feature must lie on or within the tolerance zone. See FIGURE 5-149. A concentricity tolerance requires the establishment and verification of the feature's median points; in most applications, the location of the feature's median points is not functionally important. Note that a concentricity tolerance is essentially the same as a symmetry tolerance, except that concentricity applies to features that exhibit axial or center point symmetry which are symmetrically disposed about a datum axis or center point, and symmetry applies to features that exhibit planar symmetry which are symmetrically disposed about a datum center plane, axis or center point.

5.14.10.1.1 Concentricity Compared With Other Geometric Tolerancing Methods. In most applications, the axis of a feature, the runout, or the profile of a feature's surface is more functionally important than the median points. Therefore, in most applications, concentricity tolerancing is probably not the correct tolerance to use; position, runout, or profile of a surface would be more functional choices. However, concentricity tolerancing may be the functional choice in cases where the center of mass or balance is the only functionally important variable. If it is assumed that a feature is composed of a homogeneous material, then the median points of a feature could be considered to represent local centers of mass for the feature. In general, it is recommended that concentricity should not be used. The exception is if the only functional requirement is static balance of the feature. Note that even with the assumption of homogeneity stated above, a surface could be balanced and not meet a concentricity tolerance, as would be the case of an imperfect cylindrical surface having an odd-number of lobes. Note that runout and profile tolerances also control balance, albeit potentially less directly than concentricity.

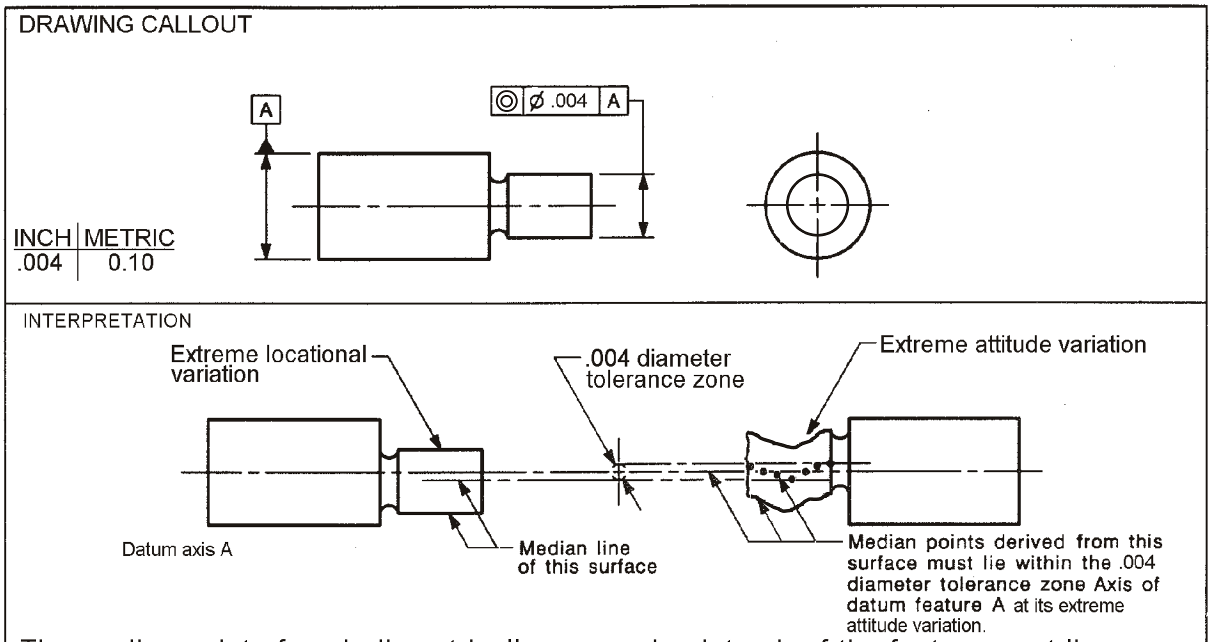

The median point of each diametrically-opposed point pair of the feature must lie on or within a Ø.004 cylindrical tolerance zone. The axis of the tolerance zone is coincident with datum axis **A**. The specified tolerance and the datum feature reference may only be applied **on an RFS** basis.

CONCENTRICITY TOLERANCING
FIGURE 5-149

5.14.10.2 Concentricity Tolerance For a Non-Rigid Part. Irregularities in the form of the toleranced feature may make it difficult to establish the median points of the feature during inspection. For instance, a nominally cylindrical surface may be bowed or out-of-round in addition to being offset from the datum axis or center point; in such cases, finding the median points of the feature may entail a time-consuming analysis of the surface. Therefore, unless there is a definite need to control the median points (as in the case shown in FIGURE 5-150), it is recommended that the feature be controlled using other geometric tolerancing method. See PARAGRAPH 5.14.10.1.1 and FIGURES 5-142 thru 5-148.

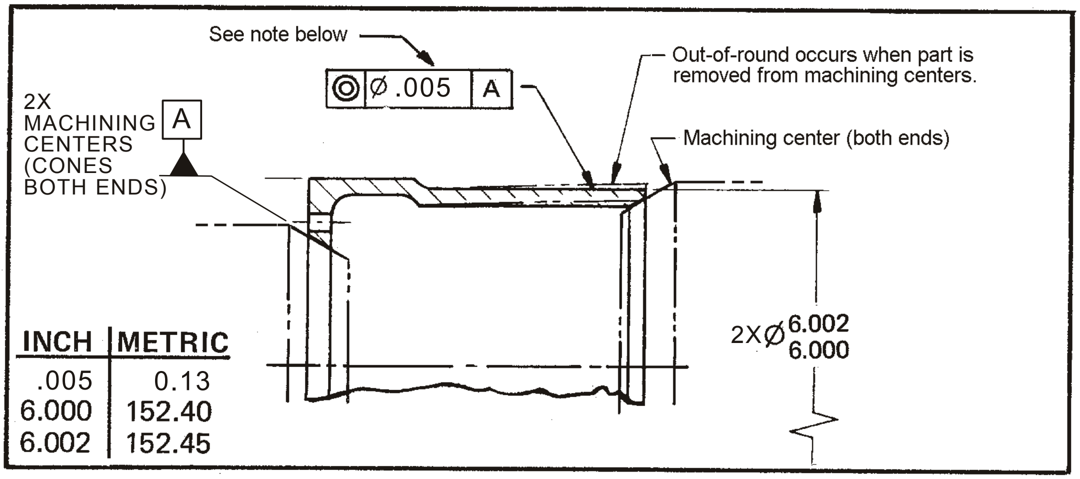

INCH	METRIC
.005	0.13
6.000	152.40
6.002	152.45

A concentricity tolerance has been applied to the smaller outer diameter on the right side of the part above. Runout, position, or profile of a surface tolerances could also have been used to control the variation of the OD.

This part is assumed to be non-rigid. In this example machining centers are shown in both ends of the ID and specified as datum feature simulator A. It is assumed that since this is a non-rigid part, the part will flex and the OD will deform as the part is removed from the machining centers. The machining centers are not necessarily functional datum features, but sometimes it may be advantageous to use such an approach. This approach would be functional if the mating part engaged the ID in the exact same manner as the machining centers.

CONCENTRICITY APPLIED TO A NON-RIGID PART
FIGURE 5-150

5.14.11 Coaxiality. Coaxiality is the condition where the axes of two or more surfaces of revolution are coincident. The amount of permissible variation from coaxiality may be directly controlled by a positional tolerance, or indirectly controlled by a runout, concentricity or profile of a surface tolerance. See FIGURES 5-142 – 5-148 for examples of runout applications, FIGURES 5-149 – 5-150 for concentricity applications, and FIGURES 5-151A – 5-151D for examples of positional tolerance applications. Coaxiality is a statement of location, that is, it means that one or more features are located on the same axis.

5.14.11.1 Positional Tolerance Control. Where it is desired to control the relationship between cylindrical coaxial surfaces of a revolution on a material condition basis, positional tolerancing is recommended. If it desired to control the axial relationship between two more cylindrical features of size, positional tolerancing is the only method available that directly control their axes. See FIGURES 5-151A thru 151D.

PARTS WITH TWO MATING DIAMETERS

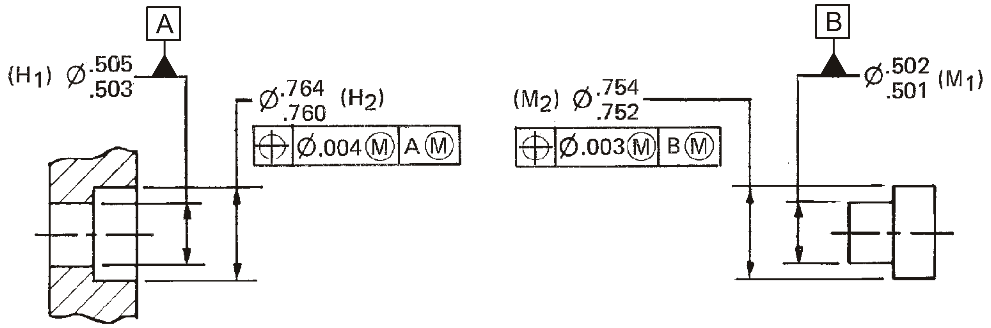

POSITION FORMULA
(BASED ON LINE TO LINE FIT)

WHERE Y = TOTAL POSITIONAL TOLERANCE FOR BOTH PARTS AT MMC
H_1 = MMC OF INTERNAL DATUM FEATURE
H_2 = MMC OF INTERNAL TOLERANCED FEATURE
M_1 = MMC OF EXTERNAL DATUM FEATURE
M_2 = MMC OF EXTERNAL TOLERANCED FEATURE

INCH	METRIC
.001	0.025
.003	0.08
.004	0.10
.006	0.15
.007	0.18
.501	12.73
.502	12.75
.503	12.78
.505	12.83
.752	19.10
.754	19.15
.760	19.30
.764	19.41

$$Y = (H_1 - M_1) + (H_2 - M_2) = (.503 - .502) + (.760 - .754) = .001 + .006 = .007$$

MUST BE DIVIDED BETWEEN MATING DIAMETERS, e.g. .004 And .003

COAXIALITY CONTROLLED BY POSITION TOLERANCES
FIGURE 5-151A (Continued on next page)

PARTS WITH THREE OR MORE MATING DIAMETERS WITH DATUM FEATURES REFERENCED AT MMC

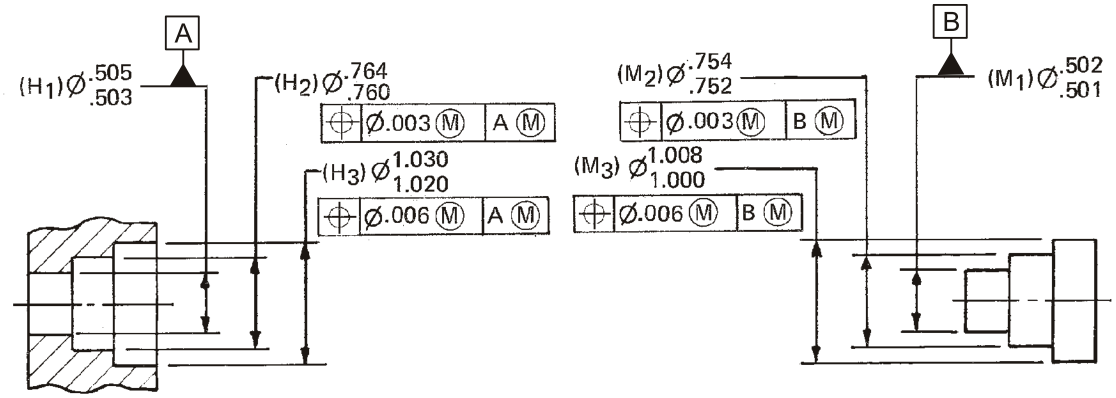

POSITION FORMULA
(BASED ON LINE TO LINE FIT)

WHERE Y_2, Y_3 ----Y_N = TOTAL POSITIONAL TOLERANCE FOR MATING DIAMETERS OF BOTH PARTS AT MMC.

H_2, H_3 - - - H_N = MMC OF RELATED INTERNAL DIAMETERS (.760, 1.020)

M_2, M_3 - - - M_N = MMC OF RELATED EXTERNAL DIAMETERS (.754, 1.008)

INCH	METRIC
.003	0.08
.006	0.15
.012	0.30
.501	12.73
.502	12.75
.503	12.78
.505	12.83
.752	19.10
.754	19.15
.760	19.30
.764	19.41
1.000	25.40
1.008	25.60
1.020	25.91
1.030	

EXAMPLE:

$Y_2 = (H_2 - M_2) = (.760 - .754) = .006$
MUST BE DIVIDED BETWEEN MATING DIAMETERS

$Y_3 = (H_3 - M_3) = (1.020 - 1.008) = .012$
MUST BE DIVIDED BETWEEN MATING DIAMETERS

Datum feature shift is possible if a datum feature of size referenced at MMC is produced at a size other than MMC. In this example, the size of datum feature simulator A is Ø.503, which is datum feature A’s MMC size; the size of datum feature simulator B is Ø.502, which is datum feature B’s MMC size. However, datum feature A may be produced up to Ø.505, which is .002 larger than its datum feature simulator, thus, the datum feature may move relative to its datum feature simulator during inspection a maximum of .002 (or +/-.001 radially from datum A). The same is true for datum feature B, although the size tolerance on datum feature B only allows it to be Ø.501, thus, its maximum datum feature shift is .001 (or +/-.0005 radially).

Remember that the material condition modifier applied to the geometric tolerance allows additional (or bonus) tolerance, and the material condition modifier applied to the datum feature reference allows datum feature shift.

COAXIALITY CONTROLLED BY POSITIONAL TOLERANCES
FIGURE 5-151B (Continued on next page)

PARTS WITH THREE OR MORE MATING DIAMETERS WITH DATUM FEATURES REFERENCED RFS

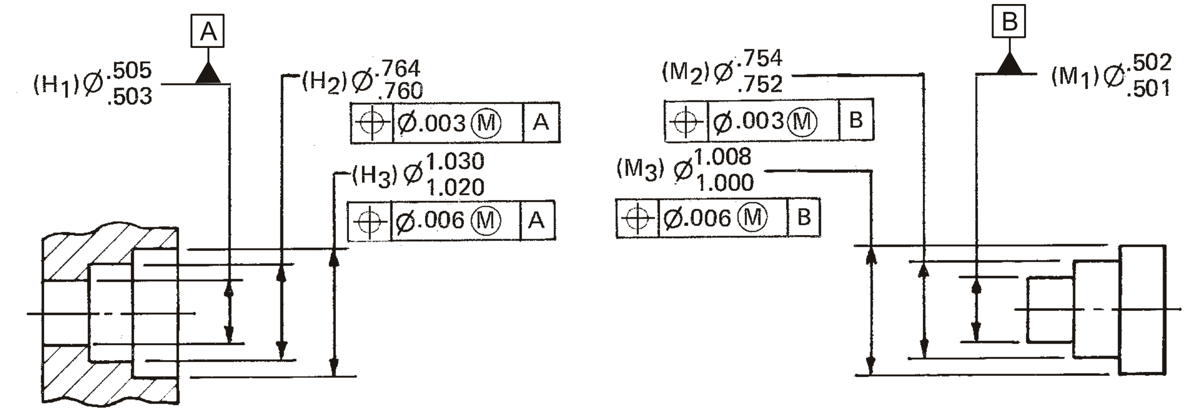

POSITION FORMULA

(BASED ON LINE TO LINE FIT)

WHERE Y_2, Y_3 ----Y_N = TOTAL POSITIONAL TOLERANCE FOR MATING DIAMETERS OF BOTH PARTS AT MMC.

H_2, H_3 - - - H_N = MMC OF RELATED INTERNAL DIAMETERS (.760, 1.020)

M_2, M_3 - - - M_N = MMC OF RELATED EXTERNAL DIAMETERS (.754, 1.008)

INCH	METRIC
.003	0.08
.006	0.15
.012	0.30
.501	12.73
.502	12.75
.503	12.78
.505	12.83
.752	19.10
.754	19.15
.760	19.30
.764	19.41
1.000	25.40
1.008	25.60
1.020	25.91
1.030	

EXAMPLE:

$Y_2 = (H_2 - M_2) = (.760 - .754) = .006$

MUST BE DIVIDED BETWEEN MATING DIAMETERS

$Y_3 = (H_3 - M_3) = (1.020 - 1.008) = .012$

MUST BE DIVIDED BETWEEN MATING DIAMETERS

Datum features A and B are referenced RFS in each feature control frame, therefore no datum feature shift is possible.

COAXIALITY CONTROLLED BY POSITIONAL TOLERANCES

FIGURE 5-151C (Continued on next page)

PARTS WITH THREE OR MORE DIAMETERS WITH ZERO TOLERANCE AT MMC

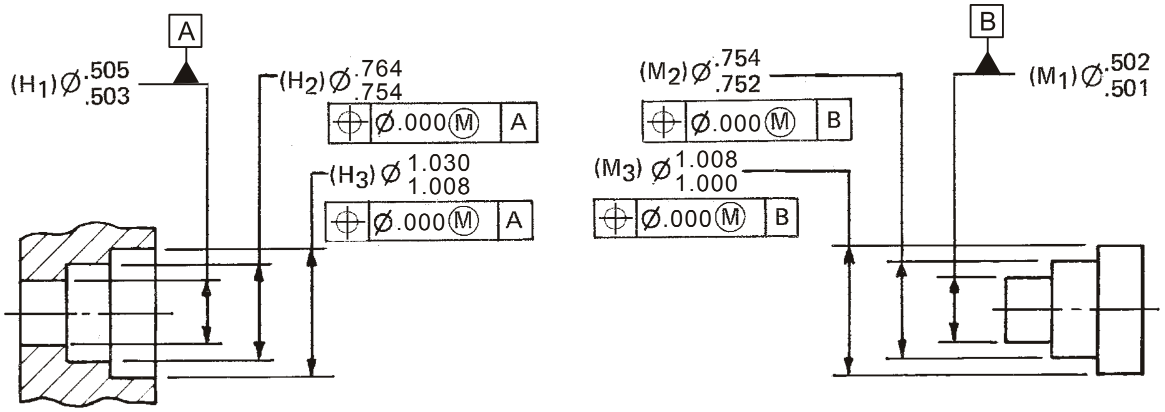

POSITION FORMULA
(BASED ON LINE TO LINE FIT)

WHERE Y_2, Y_3 ----Y_N = TOTAL POSITIONAL TOLERANCE FOR MATING DIAMETERS OF BOTH PARTS AT MMC.

H_2, H_3 ---H_N = MMC OF RELATED INTERNAL DIAMETERS (.754, 1.008)

M_2, M_3 ---M_N = MMC OF RELATED EXTERNAL DIAMETERS (.754, 1.008)

EXAMPLE:

$Y_2 = (H_2 - M_2)$ = (.754 -.754) = .000
MUST BE DIVIDED BETWEEN MATING DIAMETERS

$Y_3 = (H_3 - M_3)$ = (1.008 - 1.008) = .000
MUST BE DIVIDED BETWEEN MATING DIAMETERS

INCH	METRIC
.000	0
.501	12.73
.502	12.75
.503	12.78
.505	12.83
.752	19.10
.754	19.15
.764	19.41
1.000	25.40
1.008	25.60
1.020	25.91
1.030	26.16

Datum features A and B are referenced RFS in each feature control frame, therefore no datum feature shift is possible.

COAXIALITY CONTROLLED BY POSITIONAL TOLERANCES
FIGURE 5-151D (Continued)

5.14.12 Symmetry. Symmetry is the condition where the median point of each opposed point pair on a feature that exhibits planar symmetry such as a width feature of size (keys, keyways, slabs, etc.) or a wedge is congruent with a datum center plane. The specified tolerance and datum feature references may only be applied on an RFS basis. Symmetry is a location tolerance and requires a datum reference frame.

5.14.12.1 Symmetry Tolerance. A symmetry tolerance zone is bounded by two parallel planes, and shall not be specified as a cylindrical or spherical zone. The median point of each opposed point pair of the toleranced feature must lie on or within the tolerance zone. See FIGURE 5-152. A symmetry tolerance requires the establishment and verification of the feature's median points; in most applications, the location of the feature's median points is not functionally important. Note that a symmetry tolerance is essentially the same as a concentricity tolerance, except that symmetry applies to features that exhibit planar symmetry which are symmetrically disposed about a datum center plane, axis or center point, and concentricity applies to features that exhibit axial or center point symmetry which are symmetrically disposed about a datum axis or center point.

5.14.12.1.1 Symmetry Compared With Other Geometric Tolerancing Methods. In most applications, the center plane of a feature or the profile of a feature's surface is more functionally important than the median points. Therefore, in most applications, symmetry tolerancing is probably not the correct tolerance to use; position or profile of a surface would be more functional choices. However, symmetry tolerancing may be the functional choice in cases where the center of mass or balance is the only functionally important variable. If it is assumed that a feature is composed of a homogeneous material, then the median points of a feature could be considered to represent local centers of mass for the feature. In general, it is recommended that symmetry should not be used. The exception is if the only functional requirement is static balance of the feature. Note that even with the assumption of homogeneity stated above, a surface could be balanced and not meet a symmetry tolerance. Note that profile tolerancing also controls balance, albeit potentially less directly than symmetry.

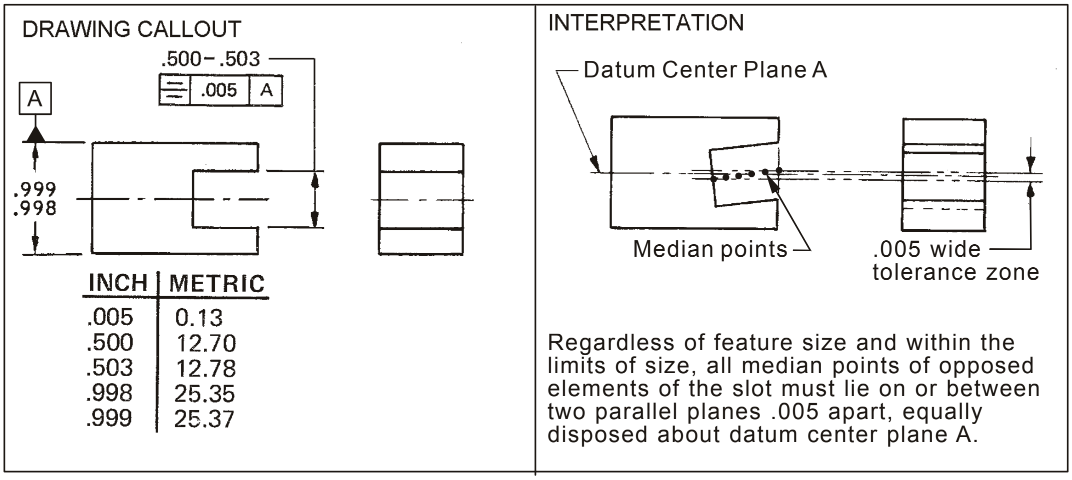

INCH	METRIC
.005	0.13
.500	12.70
.503	12.78
.998	25.35
.999	25.37

Regardless of feature size and within the limits of size, all median points of opposed elements of the slot must lie on or between two parallel planes .005 apart, equally disposed about datum center plane A.

SYMMETRY TOLERANCE PERMITTING RFS BASIS ONLY
FIGURE 5-152

5.15 POSITIONAL TOLERANCE (POSITION).

5.15.1 Description Of The Use Of Position. Position is a geometric tolerance used to control the location and orientation of the axis, center plane, or center point of a feature of size. Position may also be used to control the surface of features of size and other applicable features; in these cases the positional tolerance value must be specified with an MMC or LMC modifier. Positional tolerance zones must be related to a datum reference frame; the only exceptions to this rule are where position is used solely to control the relationship between applicable primary datum features, and where it is used in the lower segment of composite position feature control frame to control the relationship between features without datum feature references. Position does not control orientation if a more restrictive orientation tolerance applies.

5.15.1.1 Positional Tolerance. A positional tolerance is the total permissible variation in the location of one or more features (pattern) about true position by the following:

a. For cylindrical features of size (holes and bosses), the positional tolerance is usually specified with a cylindrical tolerance zone, within which the axis of the feature must lie. The tolerance zone is orientated and located at the feature’s true position.

b. For width features of size (tabs, slots, etc.), the positional tolerance is usually specified with a total width tolerance zone, within which the center plane of the feature must lie. The tolerance zone is orientated and located at the feature’s true position.

c. For coaxiality or coplanarity of features of size and other applicable features.

d. For spherical features of size, the positional tolerance zone is usually specified with a spherical tolerance zone, within which the center point of the feature must lie. The tolerance zone is orientated and located at the feature’s true position.

5.15.2 Application Of MMC (Ⓜ), LMC (Ⓛ) And RFS. (Ⓢ)

a. Positional tolerancing shall always specify whether MMC or LMC applies to an individual tolerance, datum feature reference or both. The RFS symbol (Ⓢ) is no longer required since it is implied when ASME Y14.5M-1994 is the controlling document.

b. The LMC symbol can be used to advantage on drawings of castings, forgings, molded parts, etc., as one of its main uses is to maintain minimum wall thickness or edge distance between applicable features. When the LMC symbol is used, the following general note may also be included.

X. SYMBOL Ⓛ INDICATES THAT THE TOLERANCE APPLIES AT LEAST MATERIAL CONDITION AND INCREASES AS THE FEATURE APPROACHES MMC.

5.15.3 Formulas For Positional Tolerancing. The formulas shown in PARAGRAPHS 5.15.3.2, 5.15.3.3 and FIGURES 5-154A and B may be used for determining the positional tolerance of round or threaded holes of mating parts. These formulas will result in a "no-interference, no-clearance" fit at maximum material condition of the mating features. They are based on equal positional tolerances for each part; however, the tolerances may be divided unequally when required. For in one part, it is normally more practicable to assign a larger tolerance to the threaded holes in one part and a smaller tolerance to the corresponding clearance holes in the mating part. The threaded hole or holes for tight-fitting members such as dowels should be specified as "projected tolerance zone XXX" (see FIGURE 5-183), otherwise fastener interference may occur. The assembly conditions are commonly referred to as "fixed fasteners" (see FIGURE 5-153) and "floating fasteners" (See FIGURE 5-154). The "floating fastener formula" is used where two or more mating parts contain clearance holes; the "fixed fastener formula" is used where one part contains threaded holes, or holes for tight-fitting dowels, and the mating part has clearance holes.

5.15.3.1 Fixed Fastener Example. For fasteners or pins of the same diameter which are restrained (such as screws in tapped holes or pins pressed in holes when the mating part has clearance holes) the following example complies with the formula for FIGURE 5-153.

NOTE: Projected tolerance zone should be used on threaded and press-fit holes, because inspection measures above the threaded hole when measuring position and perpendicularity. For those conditions where projected tolerance zone is not wanted, the formulas given below for parts 1 and 2 calculate the tilt of the thread within it's tolerance zone. See FIGURE 5-183.

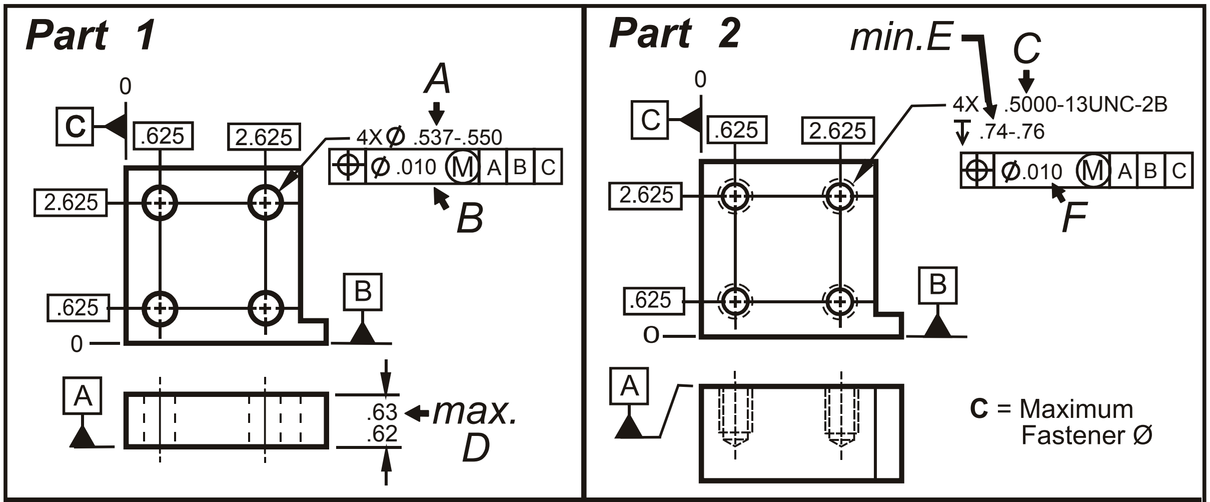

Virtual Condition of the clearance holes is: **A - B = .527**

Virtual Condition of the fasteners in the threaded holes is: $$F\left(1+\frac{2 \times D}{E}\right)+C = .527$$

Virtual condition is the interchangeability size. The virtual condition of one part must be interchangeable with the virtual condition of the mating part.

$$A = \overset{.010}{F}\left(1+\frac{2 \times \overset{.63}{D}}{\underset{.74}{E}}\right)+\overset{.010}{B}+\underset{.500}{C} = .537$$

$$B = A-C-F\left(1+\frac{2 \times D}{E}\right) = .010$$

$$C = A-B-F\left(1+\frac{2 \times D}{E}\right) = .500$$

$$F = \frac{A-B-C}{\left(1+\frac{2 \times D}{E}\right)} = .010$$

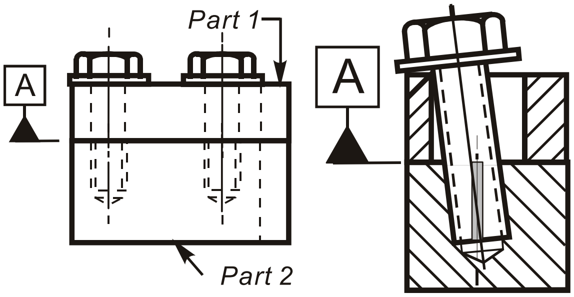

NOTE: These formulas calculate for 100% interchangeability which includes the thread tilting within the tolerance zone.

Typically, the designer solves for A. The designer needs to choose in advance the thread size and the tolerance zone size for each part.

PROJECTED TOLERANCE ZONE

4X .5000-13UNC-2B
↧.74-.76

⊕	Ø.027ⓂⓅ.63	A	B	C

F

A = C+B+F

B = A- (C+F)

F = A- (C+B)

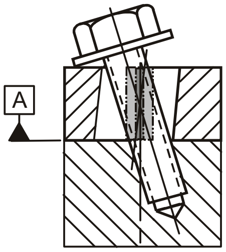

NOTE: A larger positional tolerance is allowed when a Projected Tolerance Zone is specified

FIXED FASTENER CONDITION
FIGURE 5-153

5.15.3.2 Floating Fastener Example 1. For fasteners of the same diameter when it is desirable to use the same clearance hole diameters and the same positional tolerances for the parts to be assembled, the following example complies with the formula that follows and shown in FIGURE 5-154A.

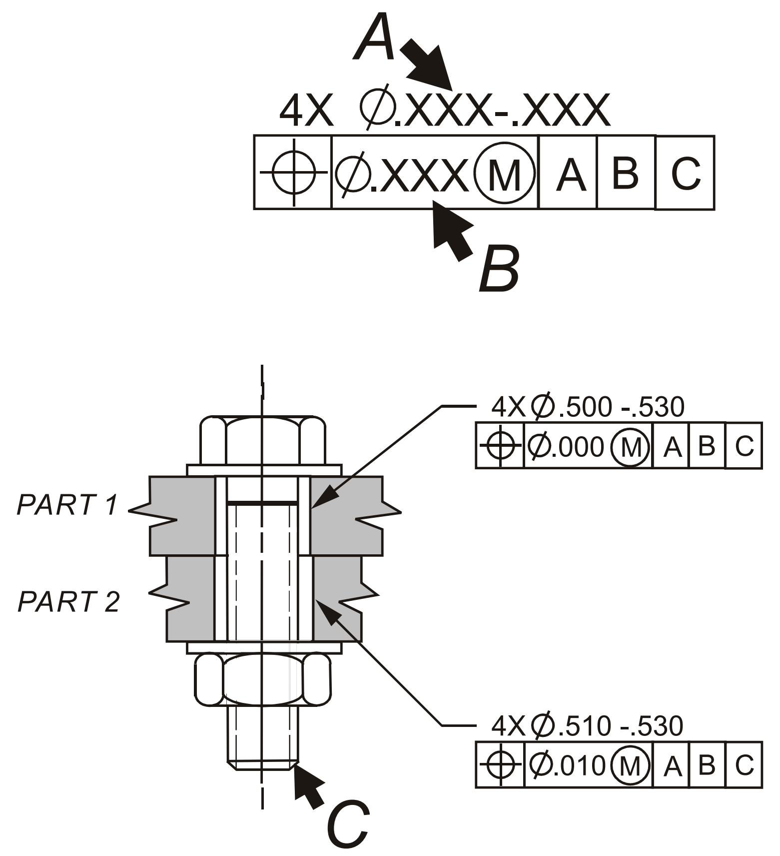

$$A = B + C \qquad B = A - C \qquad C = A - B$$

NOTES:

1. Each part has its own drawing and stands alone by itself. Each part can have the same tolerance or be different as shown above. Typically, the designer solves for "A".
2. In using any of these formulas, the designer must choose some variables; such as thread size, clearance hole tolerance, and thread tolerance.

FLOATING FASTENER CONDITION
FIGURE 5-154A

Note: The Floating Fastener and Fixed Fastener formulas require the primary datum feature to be the interfacing surface between the parts being studied. In the example shown above, primary datum feature A would be the lower surface on Part 1 and the upper surface on Part 2. If a different feature is used as the primary datum feature, an additional variable that accounts for the possible tilting of the datum reference frame with regards to the interfacial surface must be added to the formulas for each datum reference frame involved. One additional variable would have to be added to the Floating Fastener formula, as the formula is used to calculate values for each part independently. Two additional variables would have to be added to the Fixed Fastener formula, as the formula is used to calculate values for both parts simultaneously.

5.15.3.3 Fixed Fastener Example. FIGURE 5-154B shows an example of a fixed fastener application where studs pass through clearance holes in the mating part.

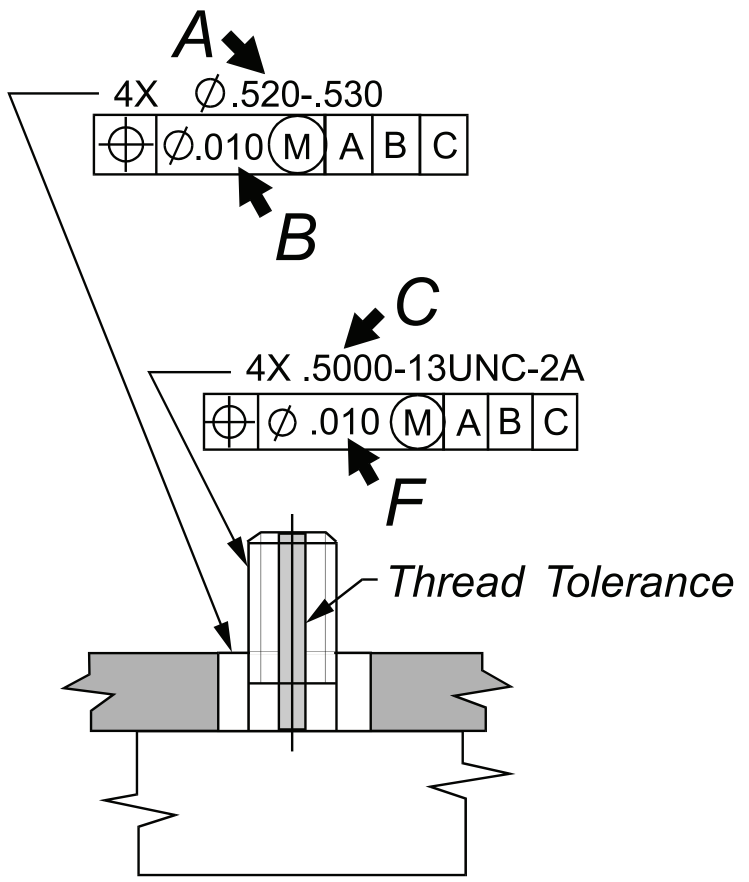

$$A = B + C + F \qquad C = A - (B + F)$$

$$B = (A - C) - F \qquad F = (A - C) - B$$

In using these formulas, the designer must choose some variables; such as thread size, clearance hole tolerance and thread tolerance. Typically, the designer solves for "A".

FIXED FASTENER CONDITION
FIGURE 5-154B

5.15.3.4 Fixed Fastener Example Using Roll Spring Dowel Pins With Additional Tolerance. When using solid dowel pins, the size tolerance of the pin and retaining hole are usually very small (.0005 max); therefore, the "fixed fastener formula" may be used and the tolerances applies at MMC. However, when using rolled spring pins an additional tolerance must be considered since the pin will conform to the actual hole size. To accommodate this additional tolerance, the "fixed fastener formula" may be used with one of the following changes. See FIGURE 5-183A.

LMC Formula:

$$T = \frac{H - F}{2} \quad \text{or} \quad F + 2T$$

Where:

H = MINIMUM DIAMETER OF CLEARANCE HOLE
F = MAXIMUM DIAMETER OF RETAINING HOLE
T = DIAMETER OF POSITIONAL TOLERANCE ZONE
    T OF RETAINING HOLE APPLIES AT LMC
    T OF CLEARANCE HOLE APPLIES AT MMC

MMC Formula:

$$T = \frac{H - F - S}{2} \quad \text{or} \quad F + 2T + S$$

Where:

H = MINIMUM DIAMETER OF CLEARANCE HOLE

F = MAXIMUM DIAMETER OF RETAINING HOLE

S = SIZE TOLERANCE OF RETAINING HOLE

T = DIAMETER OF POSITIONAL TOLERANCE ZONE

5.15.4 Identifying Features To Establish Datums For Positional Tolerance. Positional tolerances are primarily used with features related to a datum reference frame. The only exceptions are listed in PARAGRAPH 5-15.1 When two or more circular features could be used as a datum, one feature must be selected and identified with a datum feature symbol. See FIGURE 5-166D.

5.15.5 Right Angle Implications. A 90° basic angle applies whenever centerlines of surfaces or features are shown at right angles and are located or defined by basic dimensions and no angle is specified.

5.15.6 Dimensions Locating True Position. Dimensions locating true position must be excluded from the general tolerance block of the drawing by one of the following methods:

a. Applying the basic dimension symbol to each of the basic dimensions.

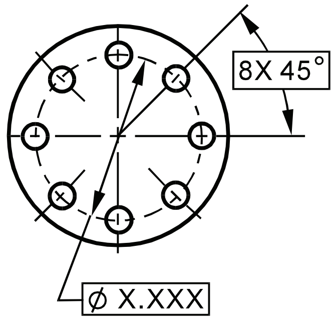

Basic dimensions
in polar coordinates

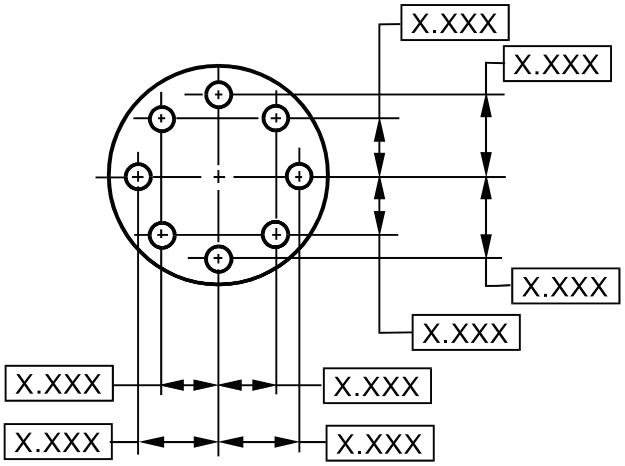

Basic dimensions in rectangular coordinates

b. Specifying in the general notes on the drawing (or in a document referenced on the drawing).

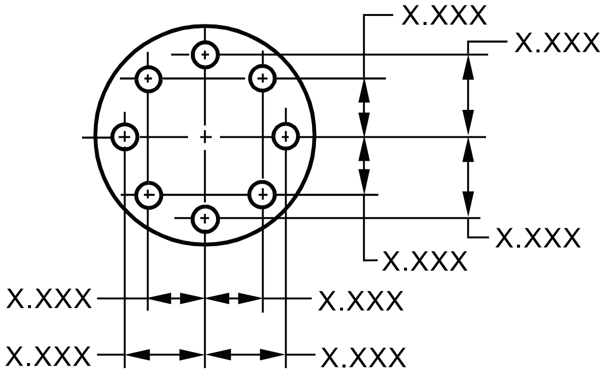

X. UNTOLERANCED DIMENSIONS LOCATING TRUE POSITION ARE BASIC

Basic dimensions identified by a general note

5.15.7 Advantages Of Positional Tolerances. FIGURE 5-155 illustrates three (3) methods of dimensioning the location of the same four (4) holes within a pattern. Locating the pattern itself has been omitted to simplify the interpretations.

5.15.8 Application And Interpretation of Positional Tolerances. FIGURES 5-151 thru 5-185 illustrate various methods of applying positional tolerances and their interpretations. Positional tolerance features such as holes, hole patterns, slots, etc. shall be located (and oriented) by basic dimensions.

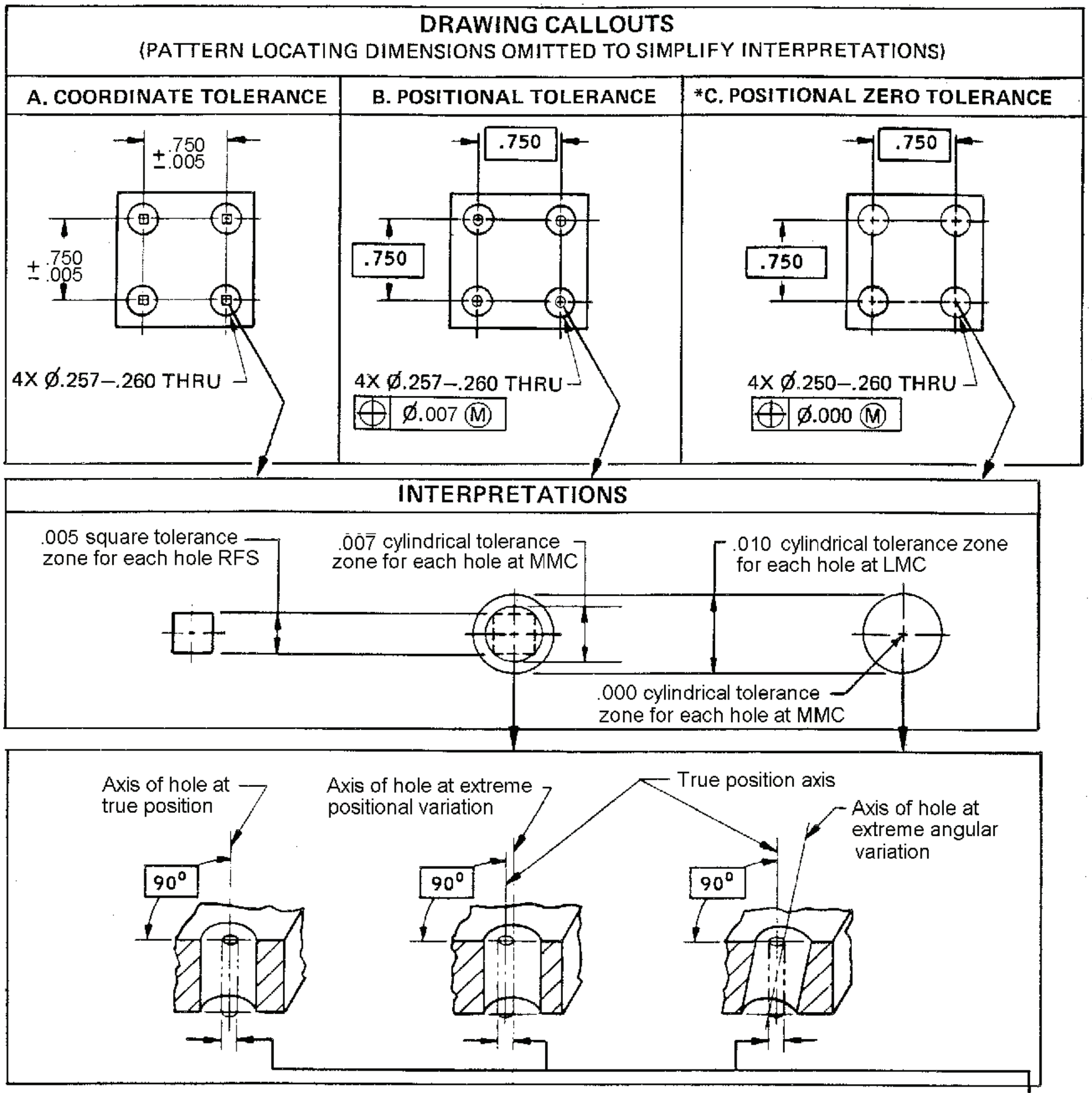

INCH	METRIC
.000	0
.0025	0.065
.007	0.18
.010	0.25
.250	6.35
.257	6.53
.260	6.60
.750	19.05

INCH	SYMBOL	CYLINDRICAL TOLERANCE ZONE ALLOWED										
	FEATURE SIZE	.250	.251	.252	.253	.254	.255	.256	.257	.258	.259	.260
	⌖ Ø.007 Ⓜ	NOT APPLICABLE							.007	.008	.009	.010
	⌖ Ø.000 Ⓜ	.000	.001	.002	.003	.004	.005	.006	.007	.008	.009	.010

METRIC	SYMBOL	CYLINDRICAL TOLERANCE ZONE ALLOWED										
	FEATURE SIZE	6.35	6.38	6.40	6.43	6.45	6.48	6.50	6.53	6.55	6.58	6.60
	⌖ Ø0.18 Ⓜ	NOT APPLICABLE							0.18	0.20	0.23	0.25
	⌖ Ø 0 Ⓜ	0	0.03	0.05	0.08	0.10	0.13	0.15	0.18	0.20	0.23	0.25

ADVANTAGES OF POSITION TOLERANCES
FIGURE 5-155

5.15.9 Extension of Positional Tolerance Where Necessary. Positional tolerancing at MMC can be extended in applications to provide a greater tolerance within functional limits than would otherwise be allowed. This can be accomplished in the assembly of two identical plates, one of which is shown in FIGURE 5-156, using conventional tolerancing at MMC and one using zero tolerancing at MMC as shown in FIGURE 5-157.

5.15.9.1 Conventional Positional Tolerancing at MMC. Using conventional positional tolerancing, the required tolerance is found by the equation: (See FIGURE 5-156.)

$$T = H - F$$

Where:

T = TOLERANCE ZONE DIAMETER = .007
H = MINIMUM DIAMETER CLEARANCE HOLE (MMC) = .507
F = MAXIMUM DIAMETER FASTENER (MMC) =.500

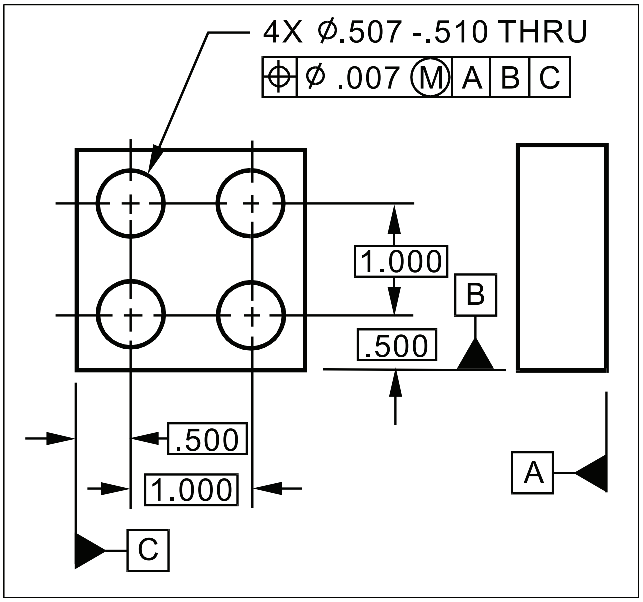

INCH	CYLINDRICAL TOLERANCE ZONED ALLOWED										
FEATURE SIZE	.500	.501	.502	.503	.504	.505	.506	.507	.508	.509	.510
TOL DIA	NOT APPLICABLE							.007	.008	.009	.010

METRIC	CYLINDRICAL TOLERANCE ZONE ALLOWED										
FEATURE SIZE	12.70	12.72	12.75	12.78	12.80	12.83	12.85	12.88	12.90	12.93	12.95
TOL DIA	NOT APPLICABLE							0.18	0.20	0.23	0.25

NOTE: As locations approach perfection under conventional positional tolerancing applications, the unused positional tolerance cannot be subtracted from the low limit of size; therefore under some conditions, functional parts must be rejected because accurately located holes are undersize.

CONVENTIONAL POSITIONAL TOLERANCING AT MMC
FIGURE 5 -156

5.15.9.2 Zero Positional Tolerance at MMC. Using zero positional tolerancing, the required tolerance is found by the equation: (See FIGURE 5-157.)

$$T = H - F$$

Where:

T = TOLERANCE ZONE DIAMETER = .000
H = MINIMUM DIAMETER CLEARANCE HOLE (MMC) = .500
F = MAXIMUM DIAMETER FASTENER (MMC) = .500

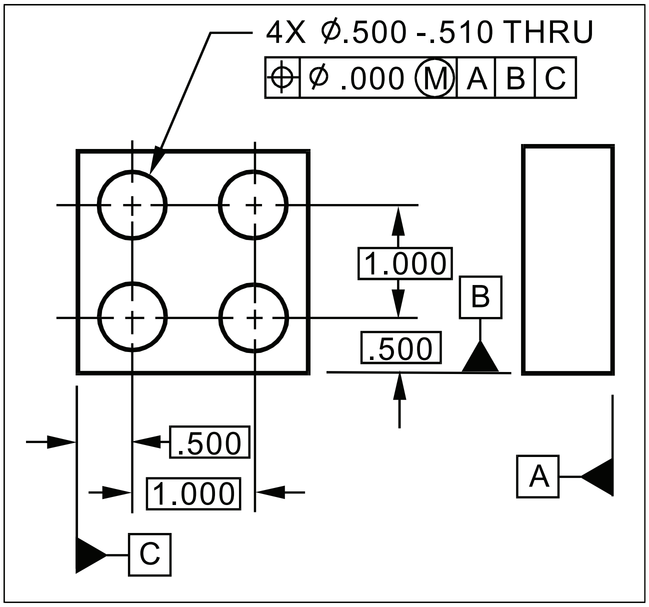

INCH	CYLINDRICAL TOLERANCE ZONED ALLOWED										
FEATURE SIZE	.500	.501	.502	.503	.504	.505	.506	.507	.508	.509	.510
TOL DIA	.000	.001	.002	.003	.004	.005	.006	.007	.008	.009	.010

METRIC	CYLINDRICAL TOLERANCE ZONE ALLOWED										
FEATURE SIZE	12.70	12.72	12.75	12.78	12.80	12.83	12.85	12.88	12.90	12.93	12.95
TOL DIA	0	0.03	0.05	0.08	0.10	0.13	0.15	0.18	0.20	0.23	0.25

NOTE: The zero positional tolerancing method establishes a direct relationship of hole size to position, with one tolerance determining the other.

ZERO POSITIONAL TOLERANCING AT MMC
FIGURE 5-157

5.15.10 Wall Thickness Protection at LMC. Wall thickness is held to a minimum where a boss has a hole located on the same axis and the boss and the hole are at their LMC. When positional tolerances are specified on an LMC basis, as each feature (boss and hole) departs from LMC (boss gets larger & hole gets smaller) the wall thickness increases. This permits a corresponding increase in the positional tolerance while maintaining the necessary minimum material thickness of the wall determined by design. See FIGURE 5-158.

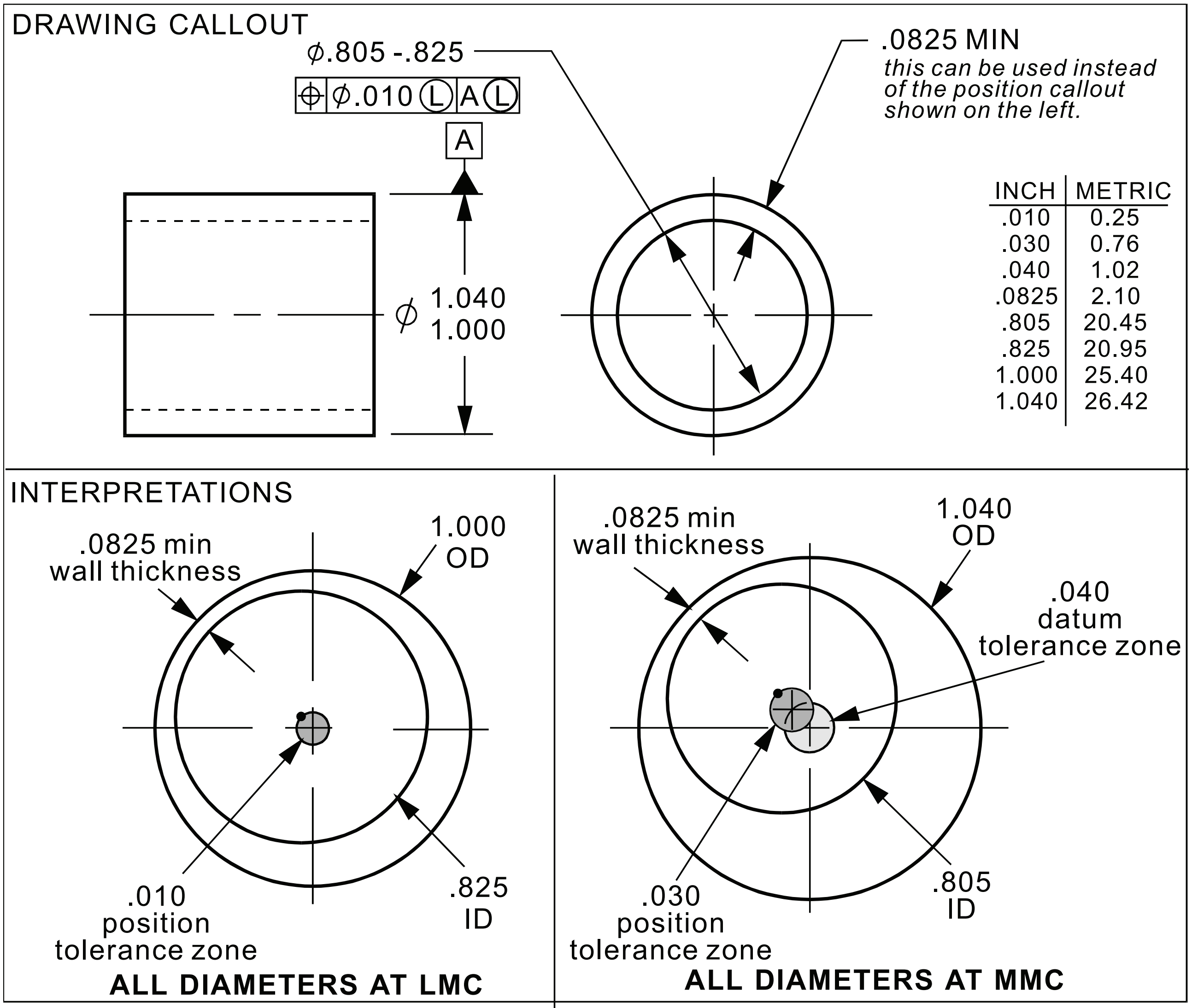

INCH	METRIC
.010	0.25
.030	0.76
.040	1.02
.0825	2.10
.805	20.45
.825	20.95
1.000	25.40
1.040	26.42

((DATUM DIA - HOLE DIA) - (HOLE TOL + DATUM TOL)) / 2
((1.000 - .825) - .(010 +.000)) / 2 = .0825

((DATUM DIA - HOLE DIA) - (HOLE TOL + DATUM TOL)) / 2
((1.040 - .805) - .(030 +.040)) / 2 = .0825

WALL THICKNESS PROTECTION USING LMC
FIGURE 5-158

5.15.11 Tolerances Specified and Datum Features Referenced RFS. Specifying tolerances to apply RFS and referencing datum features RFS is more restrictive than specifying MMC or LMC. For datum feature referencing, RFS does not allow any shift between a datum feature of size and its datum feature simulator. With regards to a specifying a geometric tolerance RFS, the size of the geometric tolerance zone for a feature of size is fixed, and does not depend on the as-produced size of the feature. Thus, a feature of size produced at LMC must be as accurately located as a feature of size produced at MMC. When function is carefully considered, and a Tolerance Stackup is done, it may be proven that RFS is the correct modifier for the tolerance and for the datum feature reference, as the additional (or bonus) tolerance and the potential datum feature shift may be detrimental to function. Note that datum feature "**B**" in FIGURE 5-159 is referenced RFS and the tolerance is specified to apply RFS in the positional tolerance feature control frame.

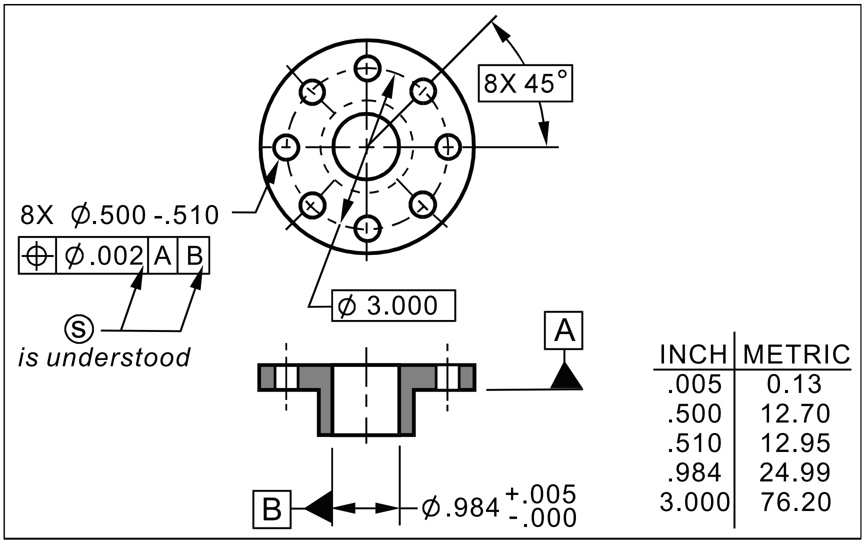

RFS APPLIED TO A FEATURE AND DATUM
FIGURE 5-159

INCH	METRIC
.010	0.25
.500	12.70
.510	12.95
.750	19.05
3.000	76.20

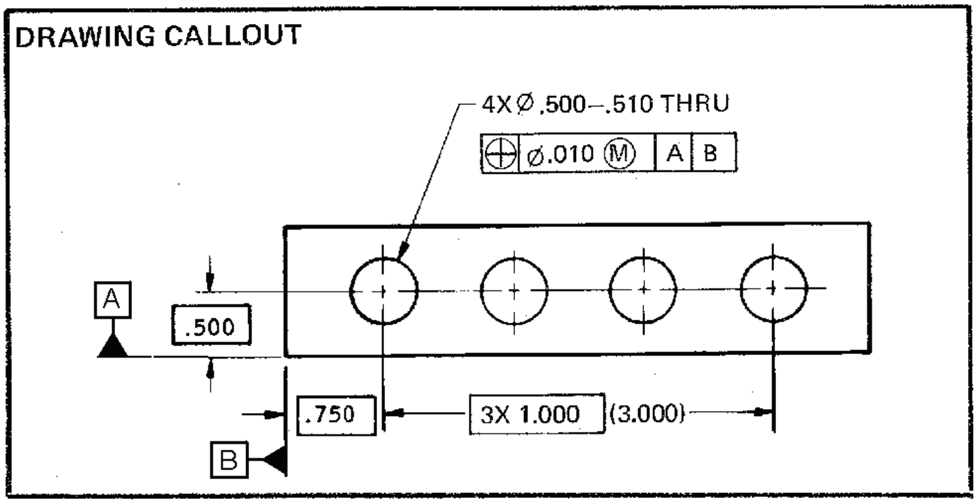
DRAWING CALLOUT

4X Ø .500–.510 THRU

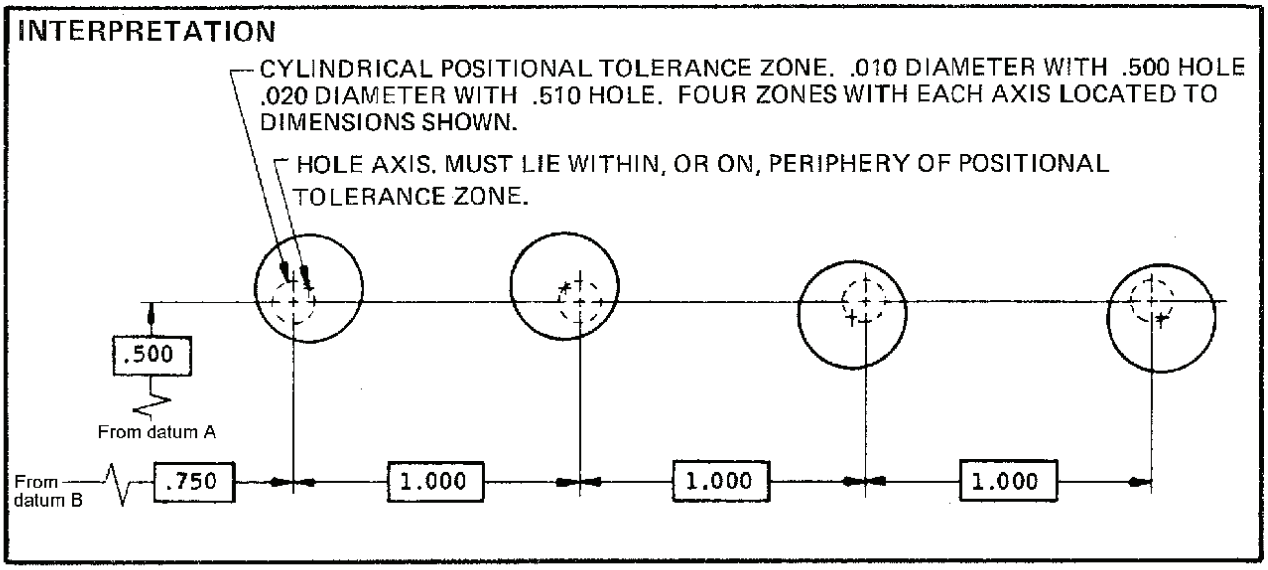
INTERPRETATION

CYLINDRICAL POSITIONAL TOLERANCE ZONE. .010 DIAMETER WITH .500 HOLE .020 DIAMETER WITH .510 HOLE. FOUR ZONES WITH EACH AXIS LOCATED TO DIMENSIONS SHOWN.

HOLE AXIS. MUST LIE WITHIN, OR ON, PERIPHERY OF POSITIONAL TOLERANCE ZONE.

LOCATING ALIGNED HOLES WITH BASIC DIMENSIONS (DATUMS SPECIFIED)
FIGURE 5-160

DRAWING CALLOUT

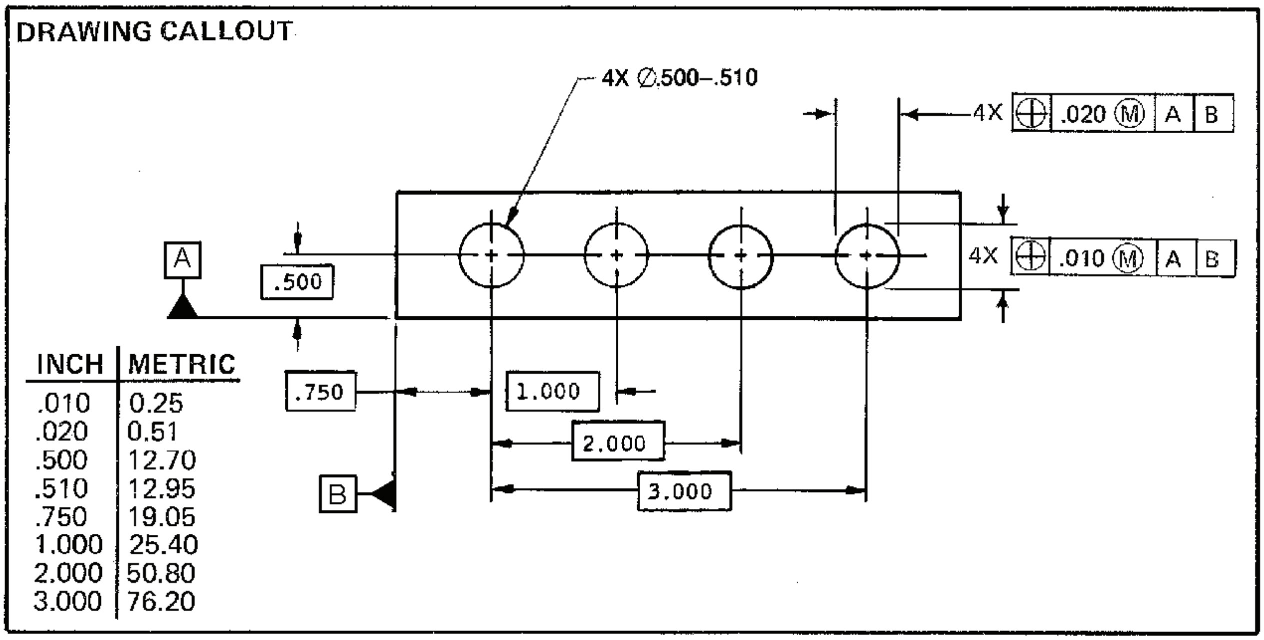

INCH	METRIC
.010	0.25
.020	0.51
.500	12.70
.510	12.95
.750	19.05
1.000	25.40
2.000	50.80
3.000	76.20

INTERPRETATION

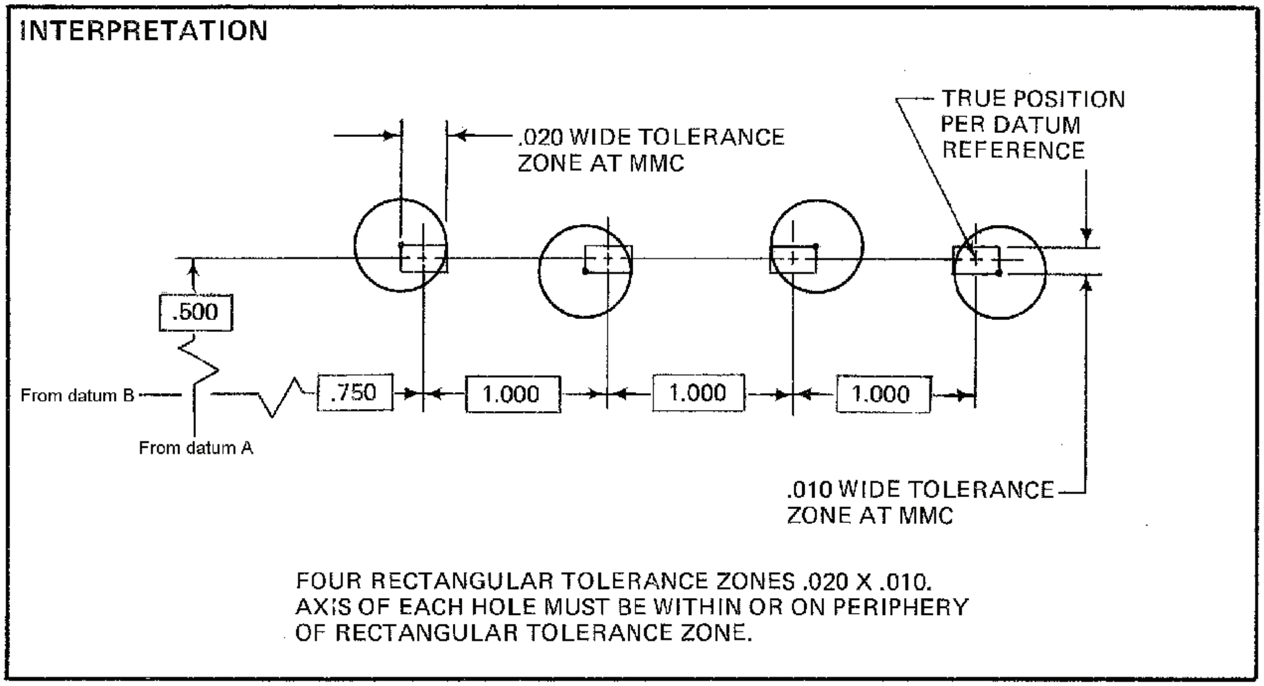

FOUR RECTANGULAR TOLERANCE ZONES .020 X .010.
AXIS OF EACH HOLE MUST BE WITHIN OR ON PERIPHERY OF RECTANGULAR TOLERANCE ZONE.

BI-DIRECTIONAL DIMENSIONING BY RECTANGULAR COORDINATE METHOD
FIGURE 5-161

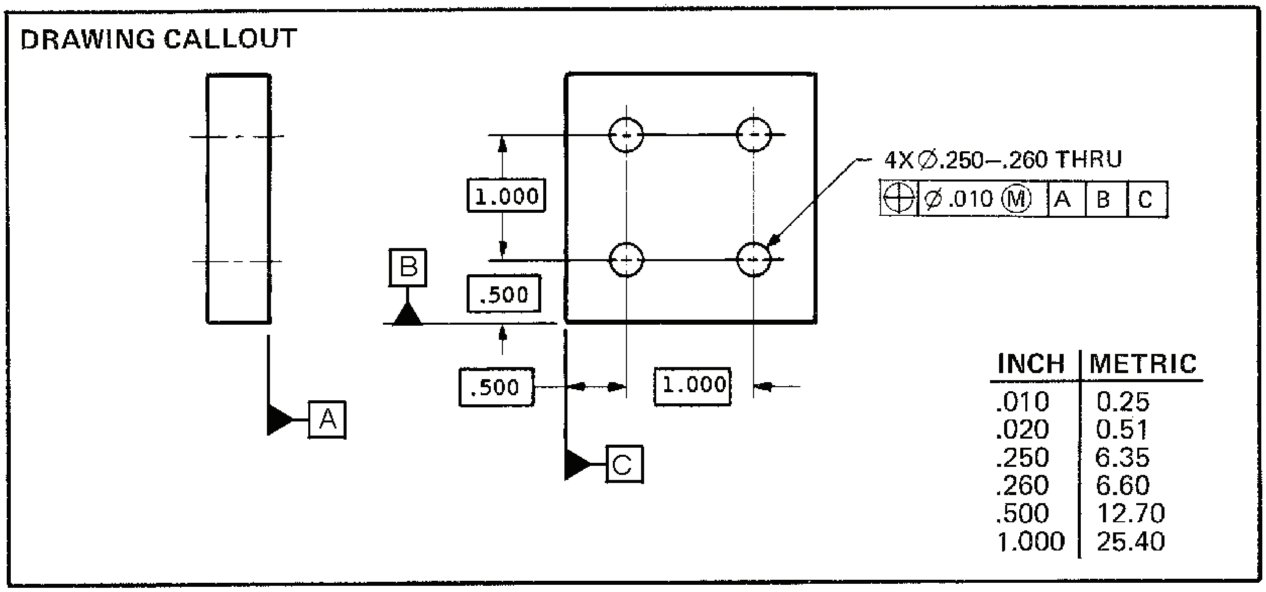

INCH	METRIC
.010	0.25
.020	0.51
.250	6.35
.260	6.60
.500	12.70
1.000	25.40

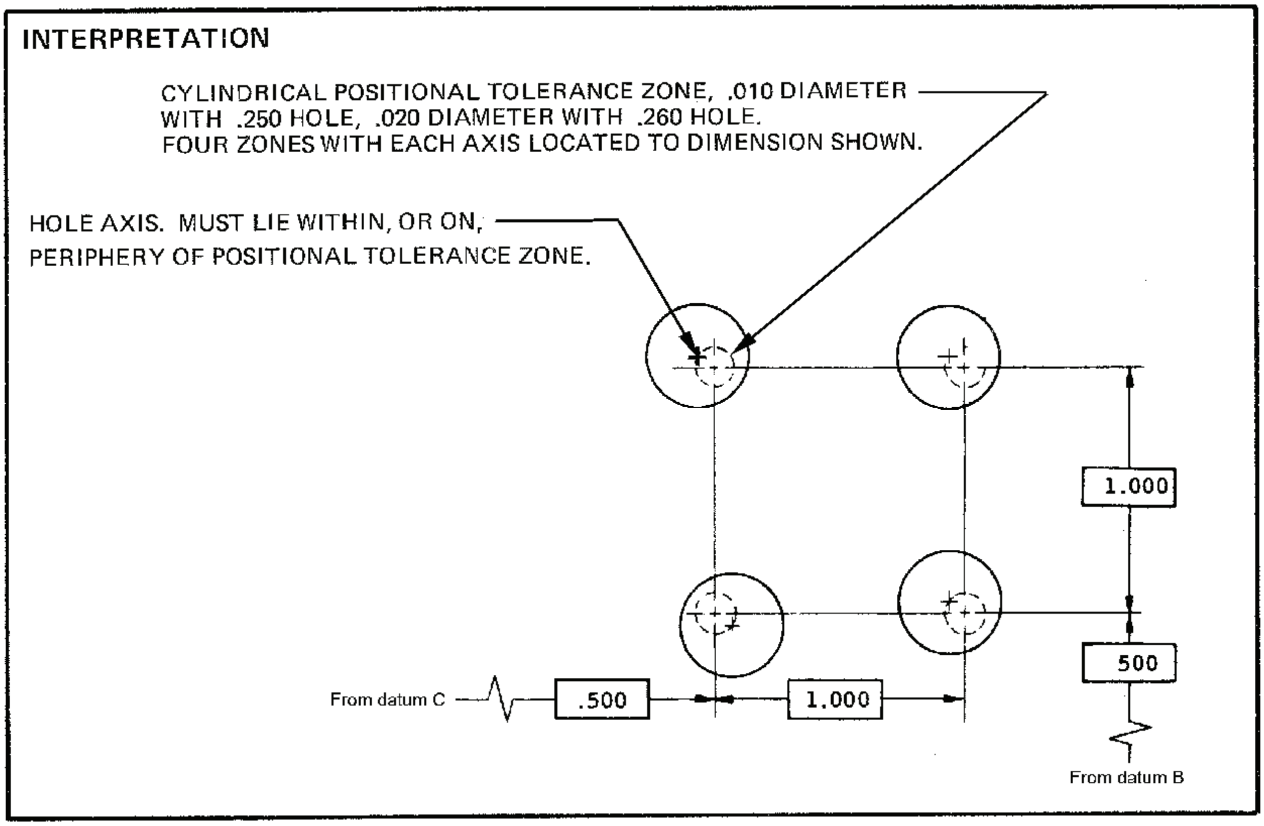

CYLINDRICAL POSITIONAL TOLERANCE ZONE, .010 DIAMETER WITH .250 HOLE, .020 DIAMETER WITH .260 HOLE. FOUR ZONES WITH EACH AXIS LOCATED TO DIMENSION SHOWN.

HOLE AXIS. MUST LIE WITHIN, OR ON, PERIPHERY OF POSITIONAL TOLERANCE ZONE.

POSITIONAL DIMENSIONING WITH ALL DIMENSIONS BASIC FROM SPECIFIED DATUMS
FIGURE 5-162

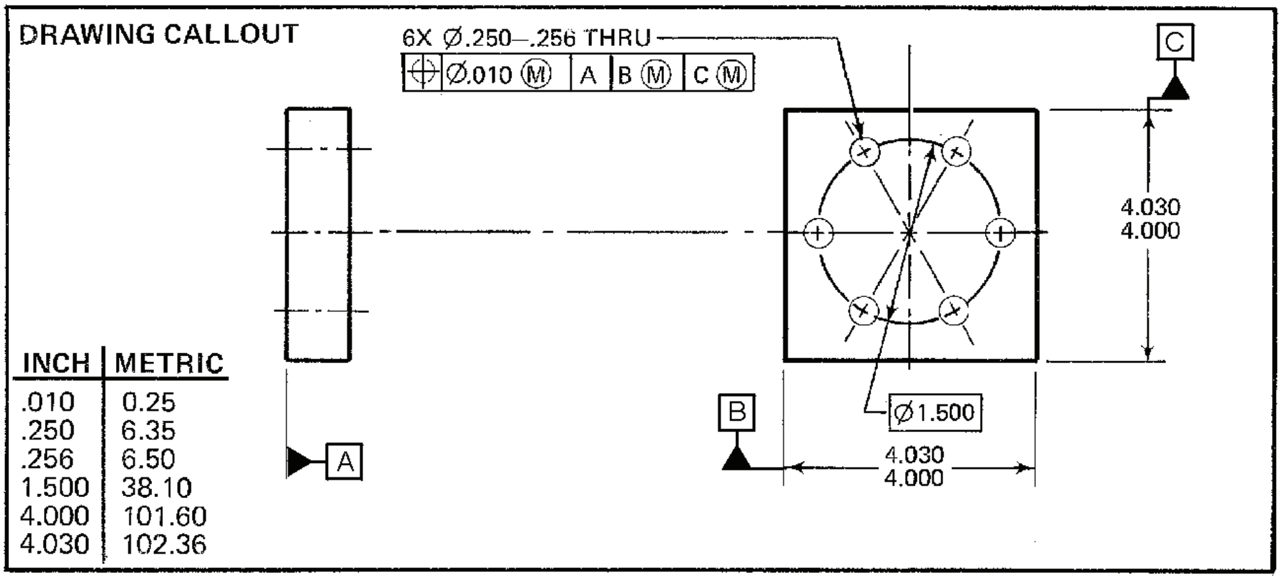

INCH	METRIC
.010	0.25
.250	6.35
.256	6.50
1.500	38.10
4.000	101.60
4.030	102.36

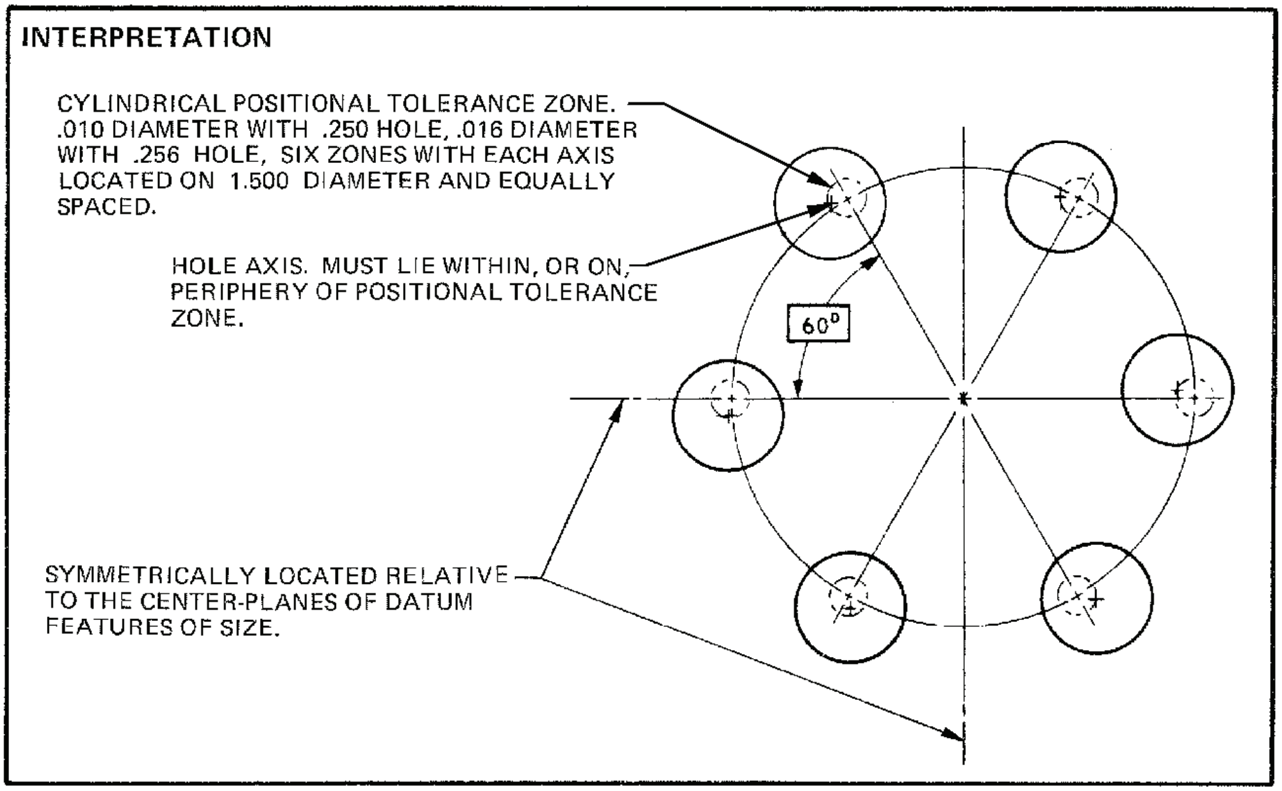

CYLINDRICAL POSITIONAL TOLERANCE ZONE. .010 DIAMETER WITH .250 HOLE, .016 DIAMETER WITH .256 HOLE, SIX ZONES WITH EACH AXIS LOCATED ON 1.500 DIAMETER AND EQUALLY SPACED.

HOLE AXIS. MUST LIE WITHIN, OR ON, PERIPHERY OF POSITIONAL TOLERANCE ZONE.

SYMMETRICALLY LOCATED RELATIVE TO THE CENTER-PLANES OF DATUM FEATURES OF SIZE.

HOLE PATTERN LOCATED SYMMETRICALLY RELATIVE TO THE CENTER-PLANE OF DATUM FEATURES OF SIZE
FIGURE 5-163

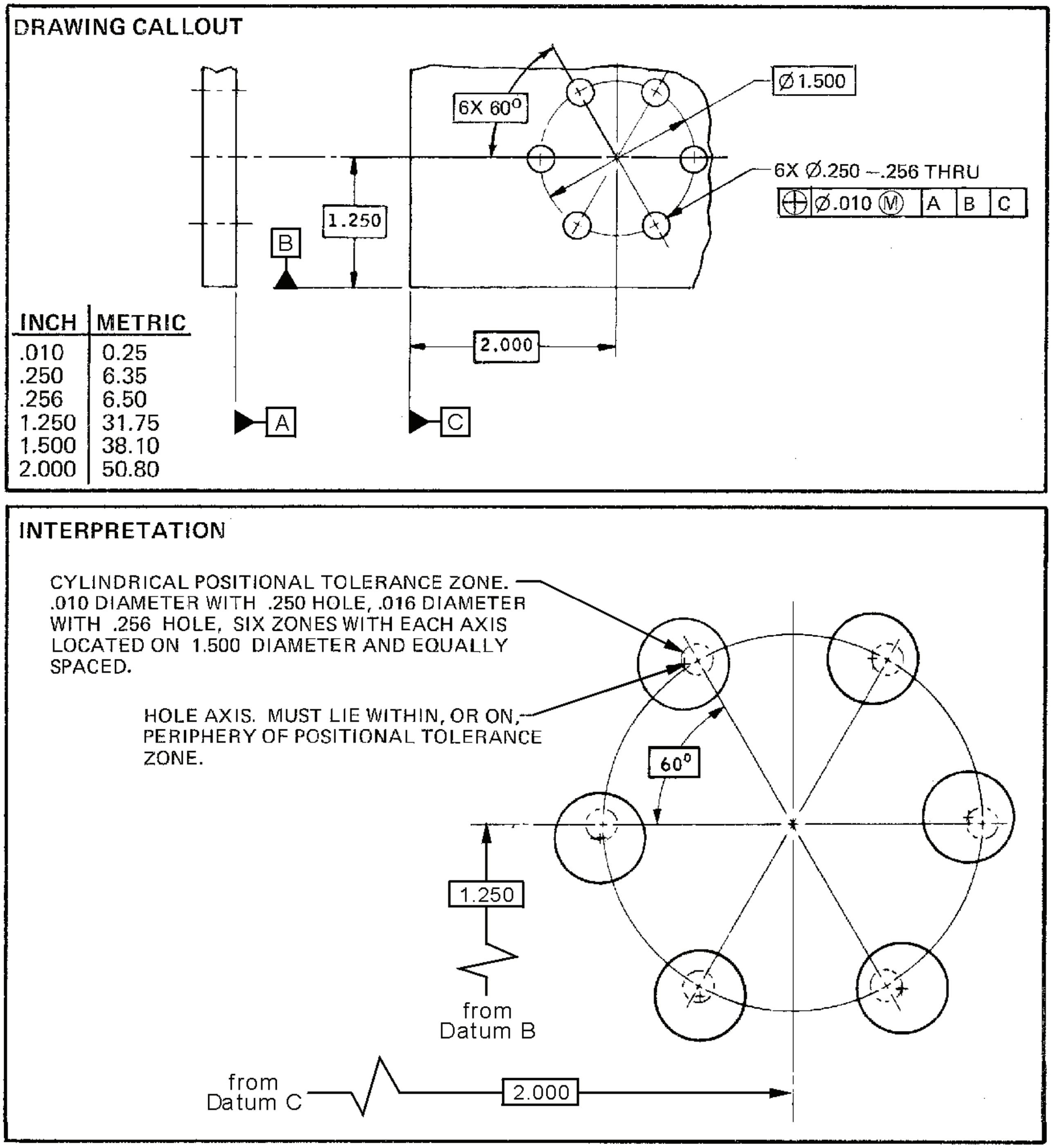

INCH	METRIC
.010	0.25
.250	6.35
.256	6.50
1.250	31.75
1.500	38.10
2.000	50.80

CYLINDRICAL POSITIONAL TOLERANCE ZONE. .010 DIAMETER WITH .250 HOLE, .016 DIAMETER WITH .256 HOLE, SIX ZONES WITH EACH AXIS LOCATED ON 1.500 DIAMETER AND EQUALLY SPACED.

HOLE AXIS. MUST LIE WITHIN, OR ON, PERIPHERY OF POSITIONAL TOLERANCE ZONE.

HOLE PATTERN LOCATED BY BASIC DIMENSIONS FROM SPECIFIED DATUMS

FIGURE 5-164

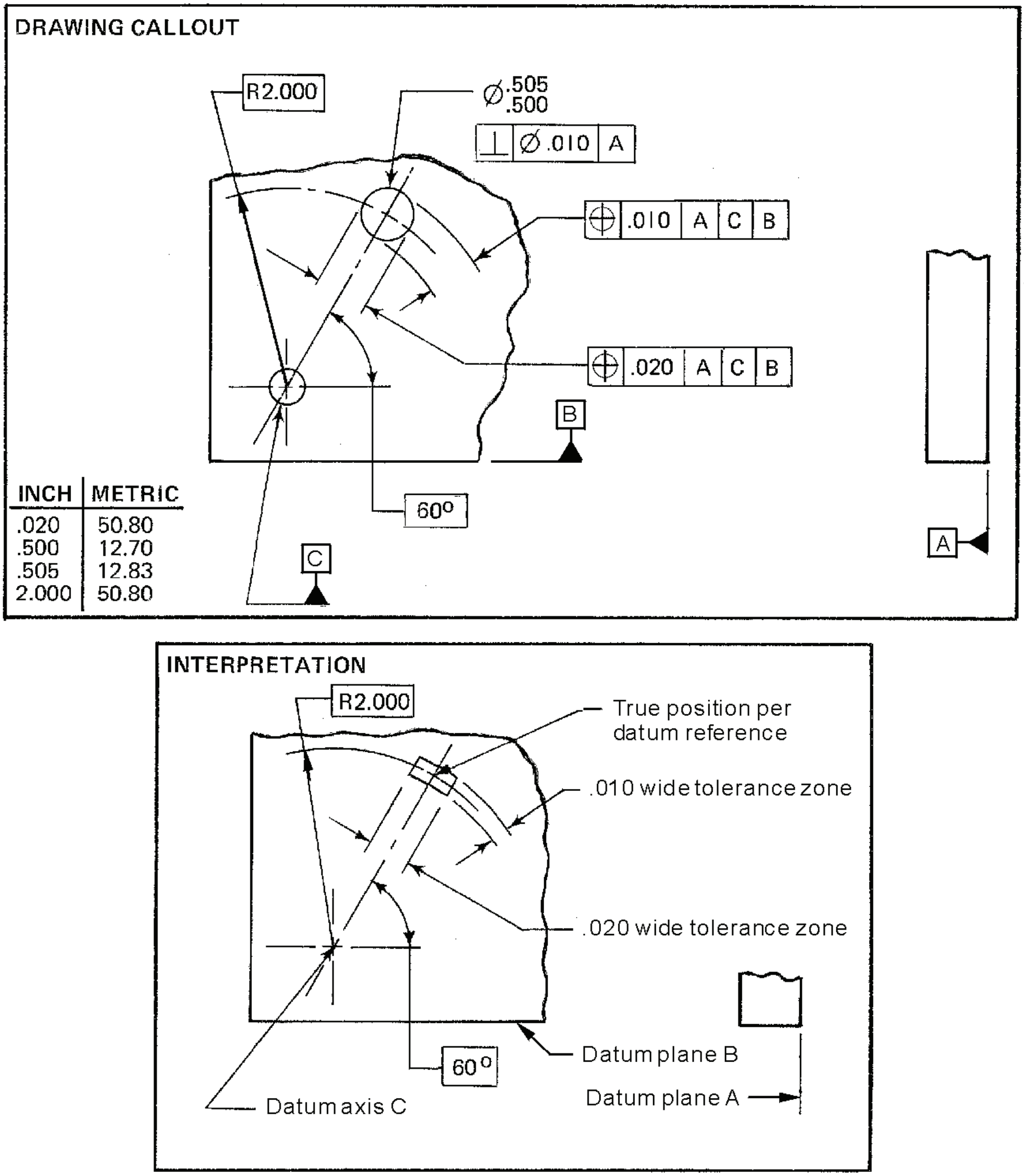

BI-DIRECTIONAL DIMENSIONING BY POLAR COORDINATE METHOD

FIGURE 5-165

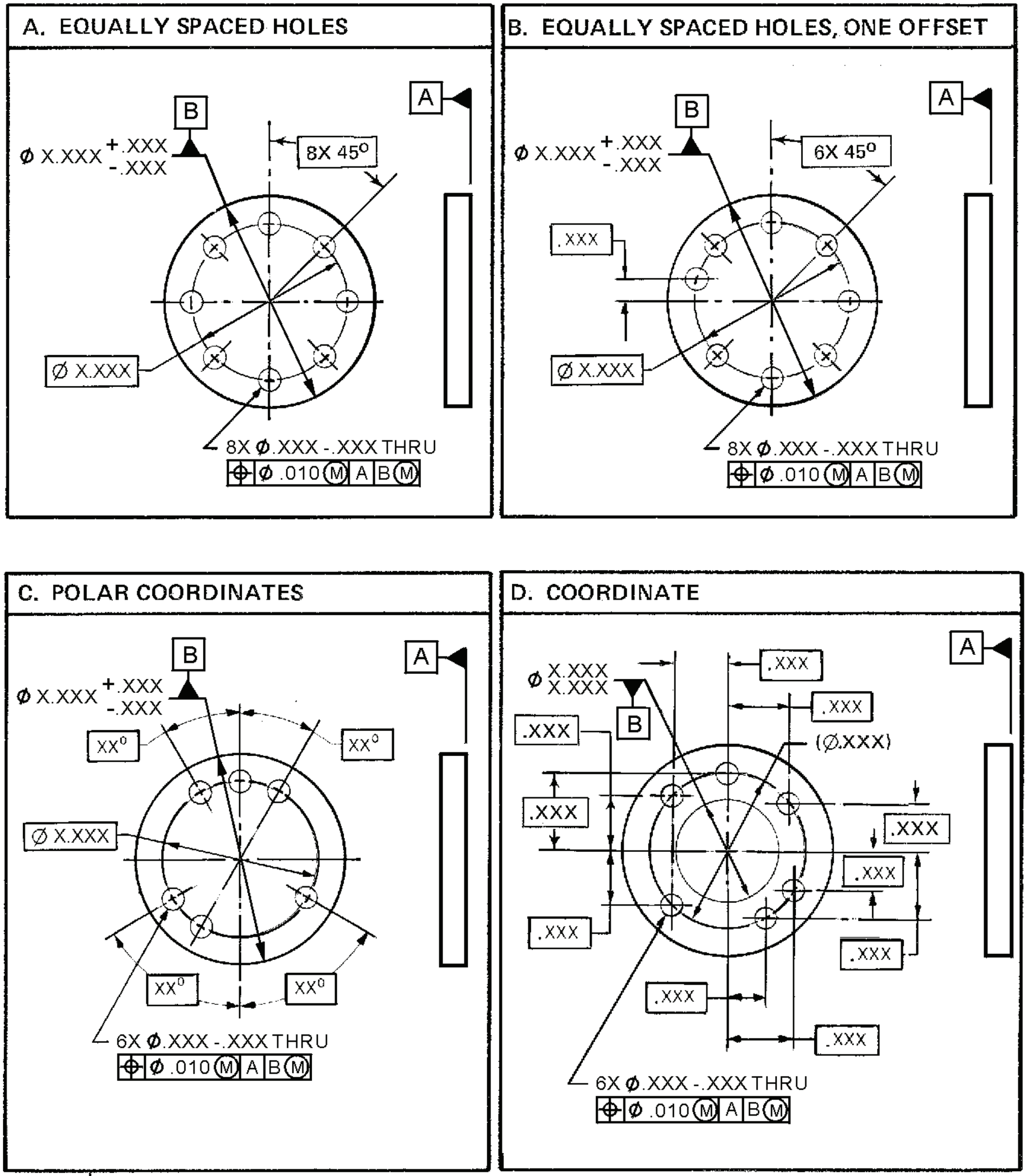

A. EQUALLY SPACED HOLES

B. EQUALLY SPACED HOLES, ONE OFFSET

C. POLAR COORDINATES

D. COORDINATE

INCH	METRIC
.010	0.25

METHODS OF DIMENSIONING HOLE PATTERNS IN RELATION TO A DATUM AXIS
FIGURE 5-166

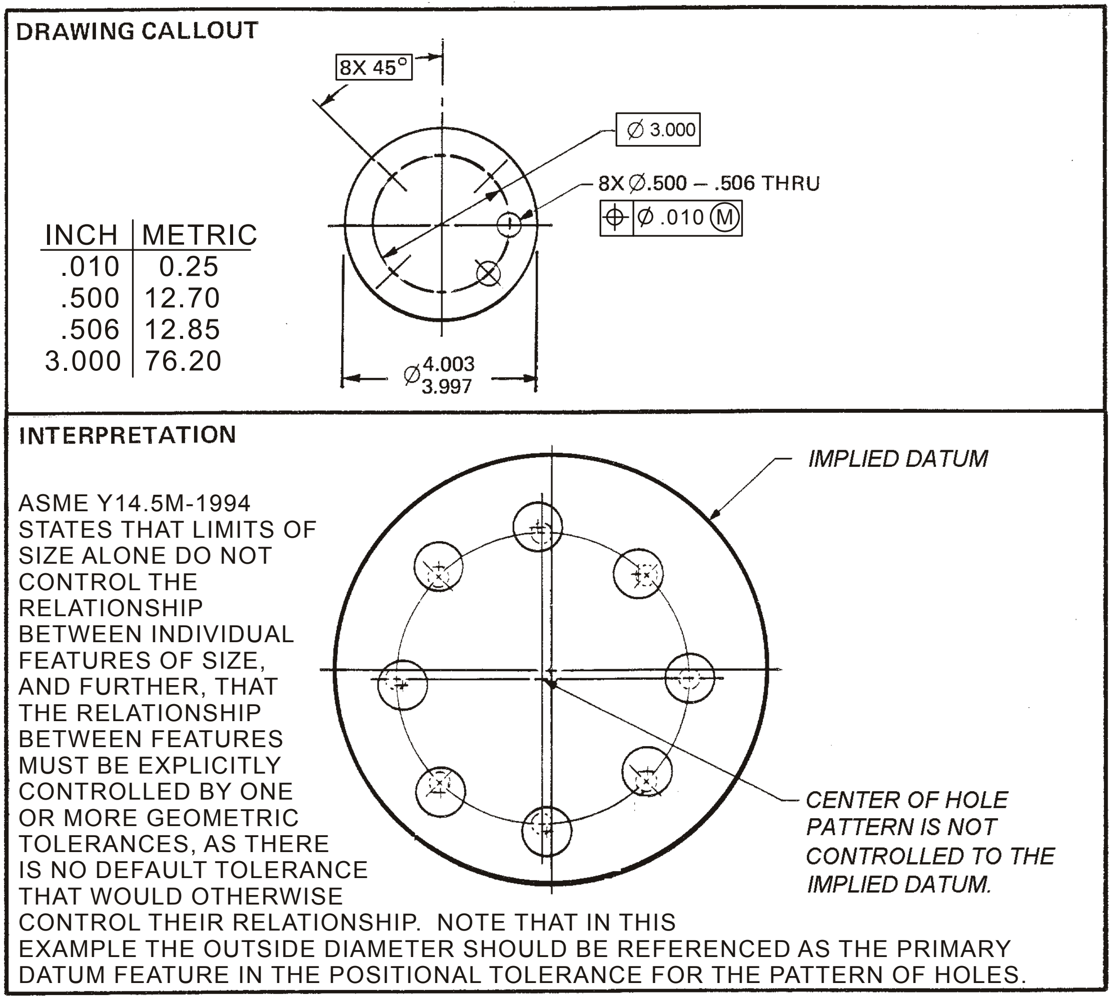

INCH	METRIC
.010	0.25
.500	12.70
.506	12.85
3.000	76.20

ASME Y14.5M-1994 STATES THAT LIMITS OF SIZE ALONE DO NOT CONTROL THE RELATIONSHIP BETWEEN INDIVIDUAL FEATURES OF SIZE, AND FURTHER, THAT THE RELATIONSHIP BETWEEN FEATURES MUST BE EXPLICITLY CONTROLLED BY ONE OR MORE GEOMETRIC TOLERANCES, AS THERE IS NO DEFAULT TOLERANCE THAT WOULD OTHERWISE CONTROL THEIR RELATIONSHIP. NOTE THAT IN THIS EXAMPLE THE OUTSIDE DIAMETER SHOULD BE REFERENCED AS THE PRIMARY DATUM FEATURE IN THE POSITIONAL TOLERANCE FOR THE PATTERN OF HOLES.

HOLE PATTERN LOCATED TO AN IMPLIED DATUM AXIS
FIGURE 5-167

The figure above shows a past practice where datums were implied. This is a very faulty and dangerous practice, as the goal of every engineering drawing is to have only one interpretation. Leaving something as important as which features are to be used to establish a datum reference frame up to chance is inconsistent with the goal of avoiding ambiguous specifications. Every specification on a drawing should be clear, concise, complete, unambiguous, and able to be related to a referenced engineering standard or specification document (such as MIL-SPEC). Thus, the meaning of the specifications on the drawing will be clearly understood by everyone who reads the drawing. The part above may seem so simple that it may seem obvious how the positional tolerance zones for the holes should be related to the as-produced part, but even with such a simple part there are at least four possible interpretations that would lead to very different results on the finished part.

Consider that outgoing inspection will be performed on the part at the machine shop that manufactured the part, and the inspector makes an assumption and first sets one of the flat faces of the part against a surface plate, then, without lifting the plate from the surface, collapses a chuck around the OD to build the datum reference frame. The datum reference frame and the positional tolerance zones would be oriented to the face and located from the perpendicular “axis” of the OD. Now consider incoming inspection at the client’s facility. This inspector assumes that the OD alone should be used to establish the datum reference frame, so the OD is oriented to a chuck and the chuck is collapsed around the OD to obtain the datum axis. This is an entirely different “axis” than obtained in the first inspection, and it is likely these measurements will yield vastly different results. On a more complex part there would be even more options for features to be used to establish a datum reference frame. Best practice is the explicitly specify all the necessary information on the drawing.

DRAWING CALLOUT

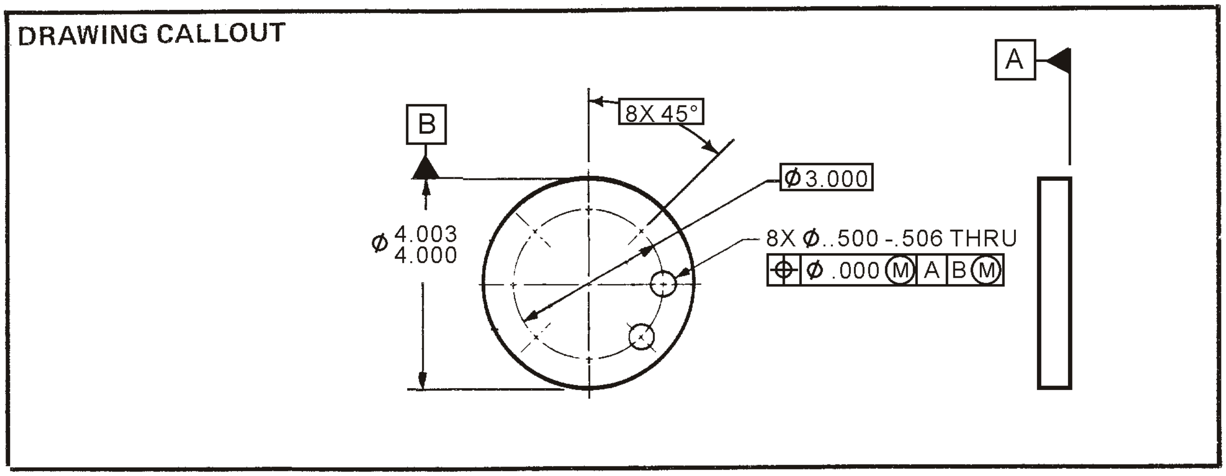

INTERPRETATION

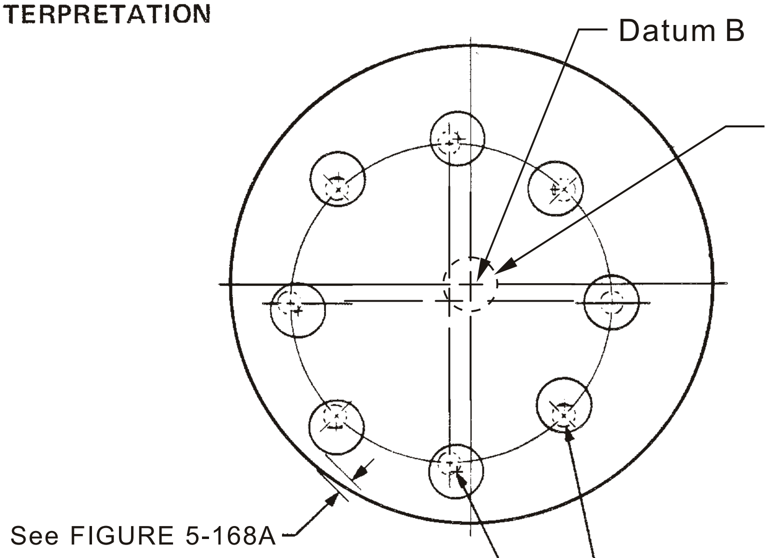

Datum Feature B may shift within its Datum Feature Simulator up to .003 (+/-.0015 radially) during inspection. This occurs because Datum Feature B is referenced at MMC in the Feature Control Frame, thus, Datum Feature Simulator B is fixed in size at Ø4.003, but Datum Feature S may be up to .003 smaller (Ø4.000.)

Datum Feature Shift is not possible if a Datum Feature is referenced RFS.

Hole axis must lie within, or on, periphery of positional tolerance zone. See TABLE 1 below.

Eight cylindrical positional tolerance zones with each axis located on 3.000 diameter and equally spaced.

TABLE 1

DATUM FEATURE SHIFT FOR DATUM FEATURE B AND TOLERANCE ZONE SIZE FOR HOLES

SIZE OF DF B		DF SHIFT		HOLE SIZE		HOLE TOL	
INCH	MM	INCH	MM	INCH	MM	INCH	MM
4.003	101.68	.000	0	.500	12.70	.000	0
4.002	101.65	.001	0.025	.501	12.73	.001	0.025
4.001	101.62	.002	0.05	.502	12.75	.002	0.05
4.000	101.60	.003	0.08	.503	12.78	.003	0.08
				.504	12.80	.004	0.10
				.505	12.83	.005	0.13
				.506	12.85	.006	0.15

"DF B" = DATUM FEATURE B
"DF SHIFT" = DATUM FEATURE SHIFT

POSITIONAL TOLERANCE WHERE DATUM FEATURE SHIFT IS POSSIBLE
FIGURE 5-168 (Continued next page)

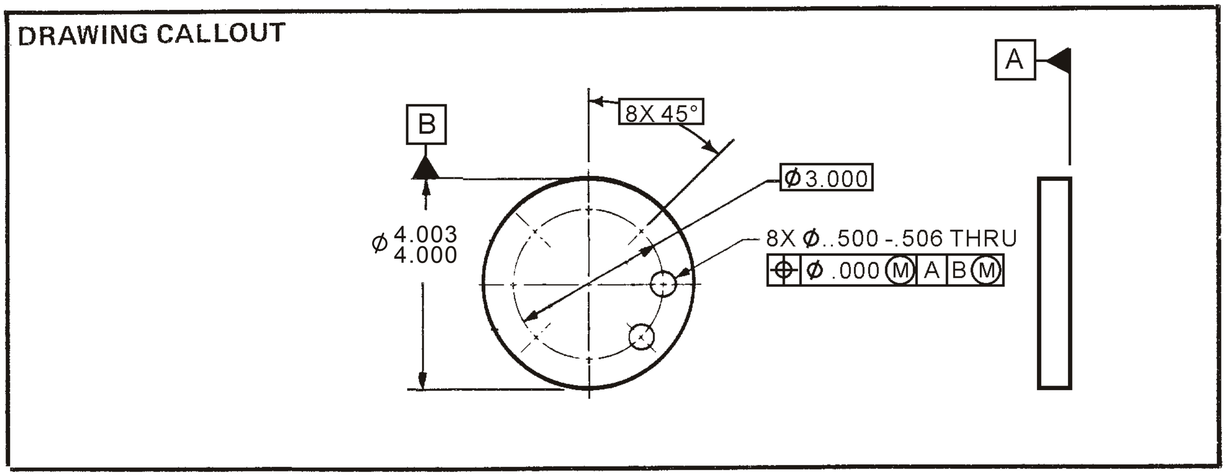

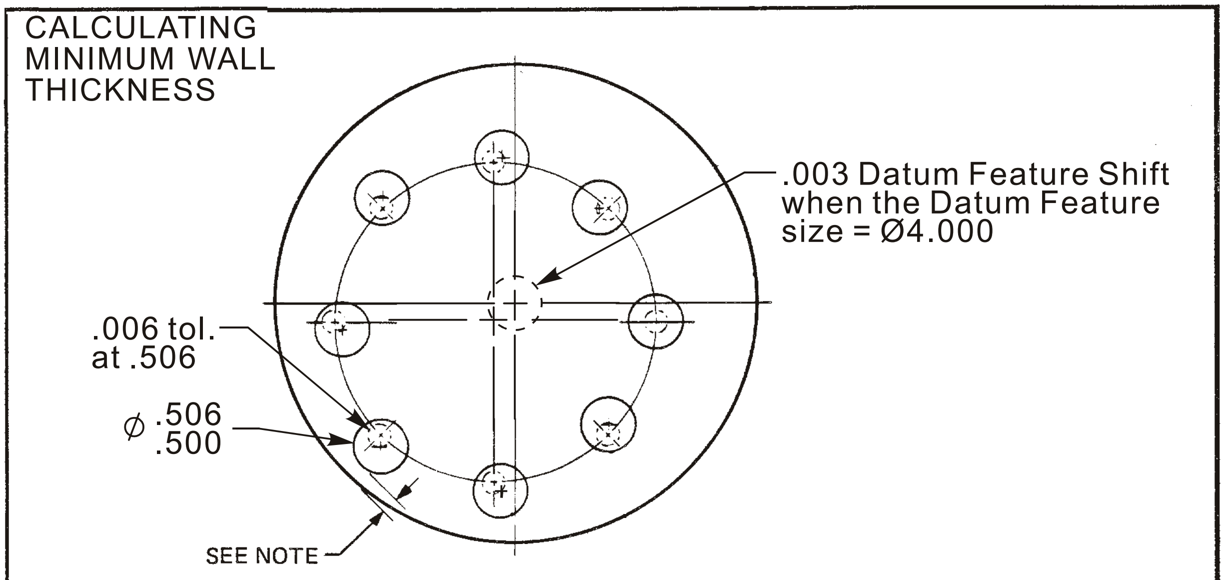

NOTE: IN SOME DESIGNS THE REMAINING WALL THICKNESS MAY BE CRITICAL.
IN THIS EXAMPLE, THE CALCULATIONS FOR DETERMINING THIS ARE:

2.000 1/2 of LMC size of Datum Feature B (4.000)
- .0015 1/2 of Datum Feature Shift(.003)
1.9985
-1.500 1/2 of 3.000 BASIC pattern diameter
.4985
-.003 1/2 of hole's positional tolerance at LMC (.006)
.4955
-.253 1/2 of LMC of hole (.506)

.2425 MINIMUM WALL THICKNESS

HOLE PATTERN LOCATED TO A SPECIFIED DATUM
FIGURE 5-168A

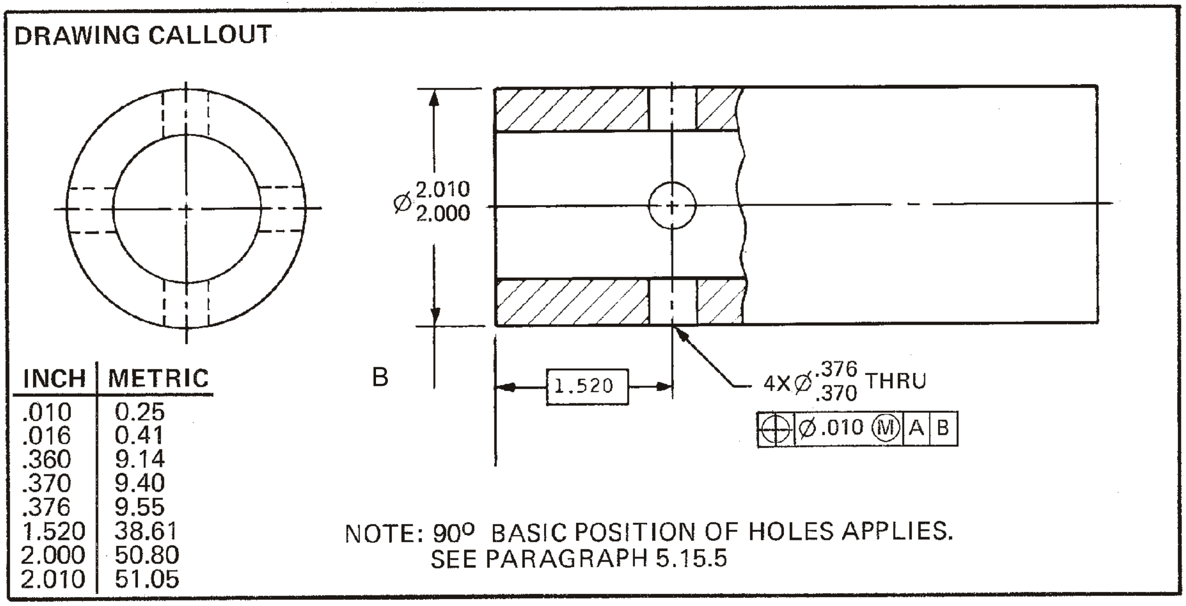

INCH	METRIC
.010	0.25
.016	0.41
.360	9.14
.370	9.40
.376	9.55
1.520	38.61
2.000	50.80
2.010	51.05

NOTE: 90° BASIC POSITION OF HOLES APPLIES.
SEE PARAGRAPH 5.15.5

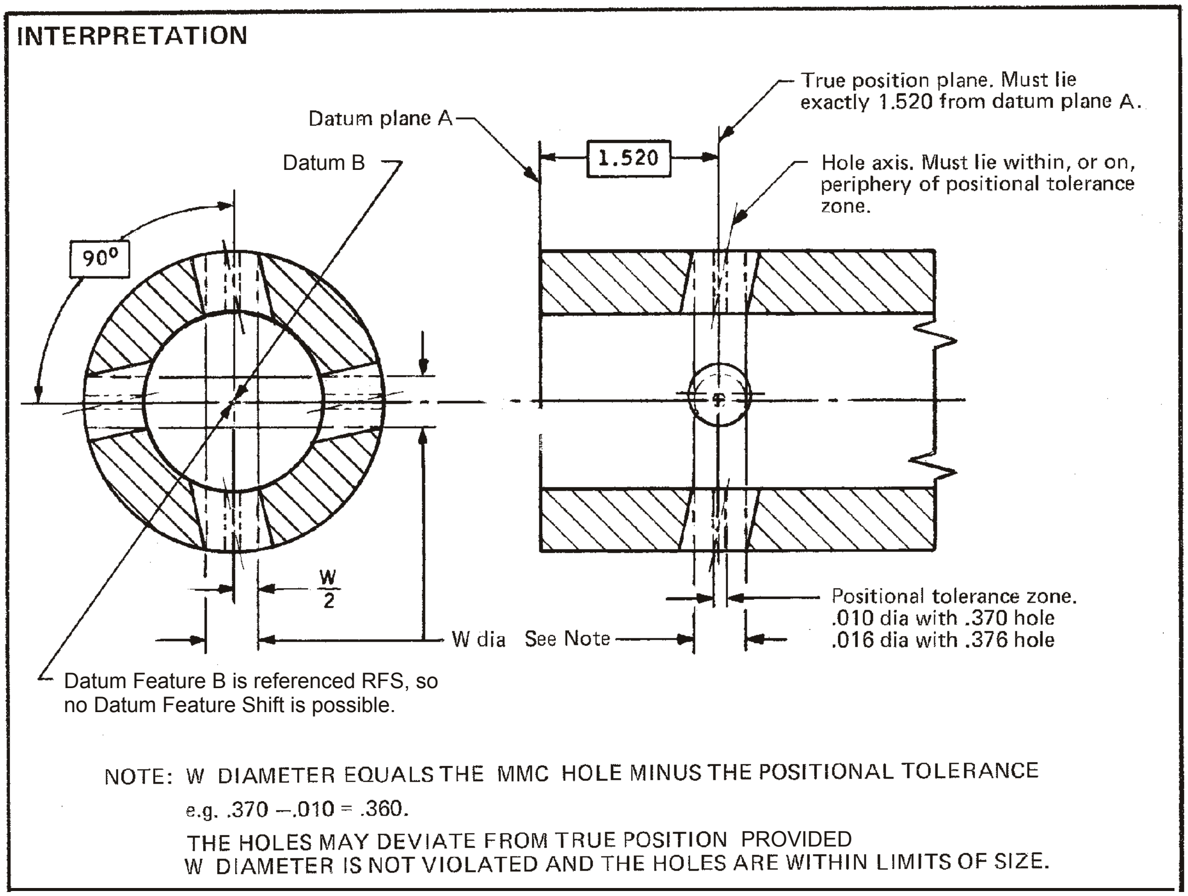

Datum Feature B is referenced RFS, so no Datum Feature Shift is possible.

NOTE: W DIAMETER EQUALS THE MMC HOLE MINUS THE POSITIONAL TOLERANCE
e.g. .370 –.010 = .360.
THE HOLES MAY DEVIATE FROM TRUE POSITION PROVIDED
W DIAMETER IS NOT VIOLATED AND THE HOLES ARE WITHIN LIMITS OF SIZE.

RADIAL HOLES LOCATED BY BASIC DIMENSION FROM SPECIFIED DATUM
FIGURE 5-169

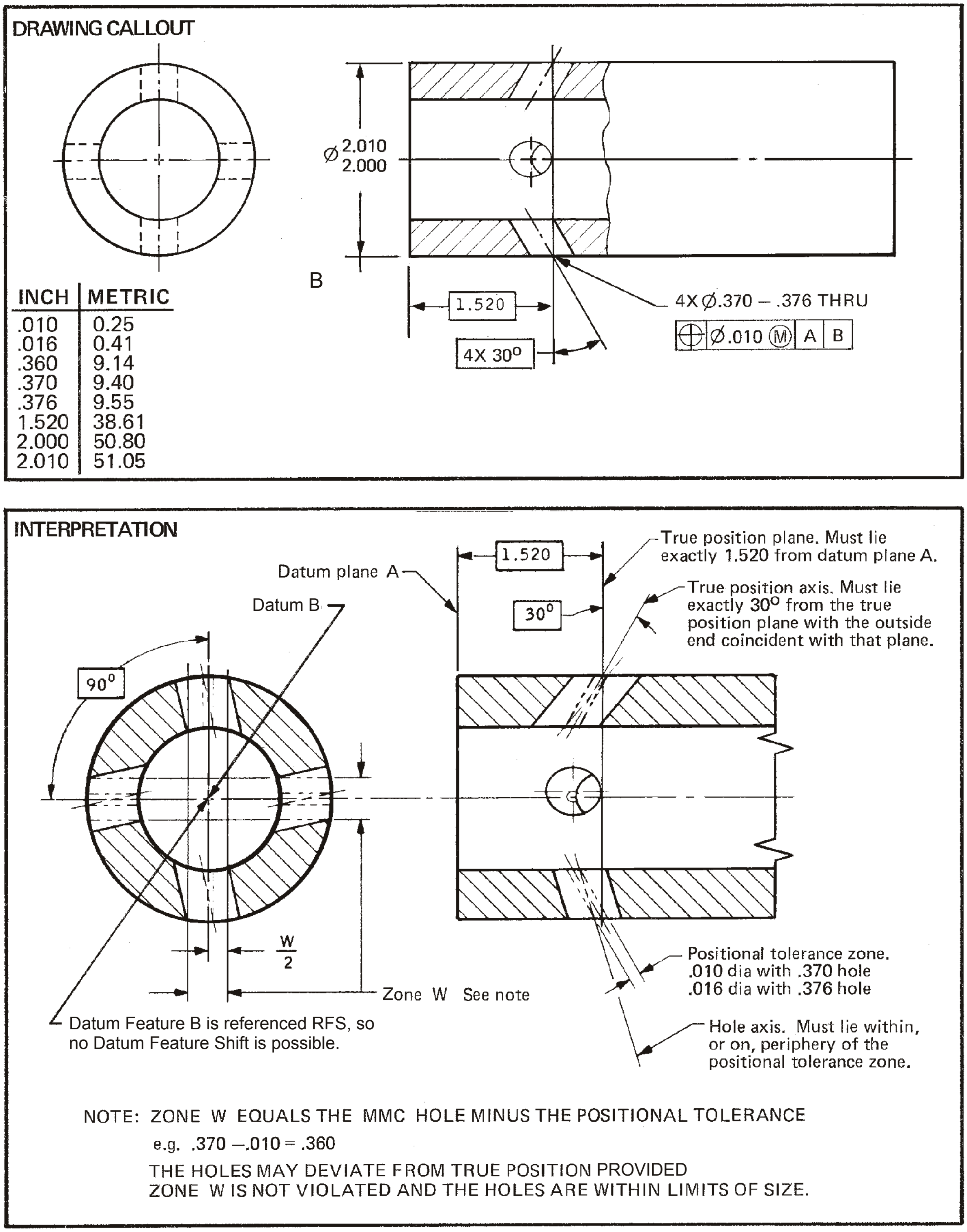

INCH	METRIC
.010	0.25
.016	0.41
.360	9.14
.370	9.40
.376	9.55
1.520	38.61
2.000	50.80
2.010	51.05

True position plane. Must lie exactly 1.520 from datum plane A.

True position axis. Must lie exactly 30° from the true position plane with the outside end coincident with that plane.

Positional tolerance zone.
.010 dia with .370 hole
.016 dia with .376 hole

Hole axis. Must lie within, or on, periphery of the positional tolerance zone.

Datum Feature B is referenced RFS, so no Datum Feature Shift is possible.

NOTE: ZONE W EQUALS THE MMC HOLE MINUS THE POSITIONAL TOLERANCE
e.g. .370 –.010 = .360
THE HOLES MAY DEVIATE FROM TRUE POSITION PROVIDED ZONE W IS NOT VIOLATED AND THE HOLES ARE WITHIN LIMITS OF SIZE.

ANGULAR RADIAL HOLES LOCATED BY BASIC DIMENSION AT O.D.
FIGURE 5-170

DRAWING CALLOUT

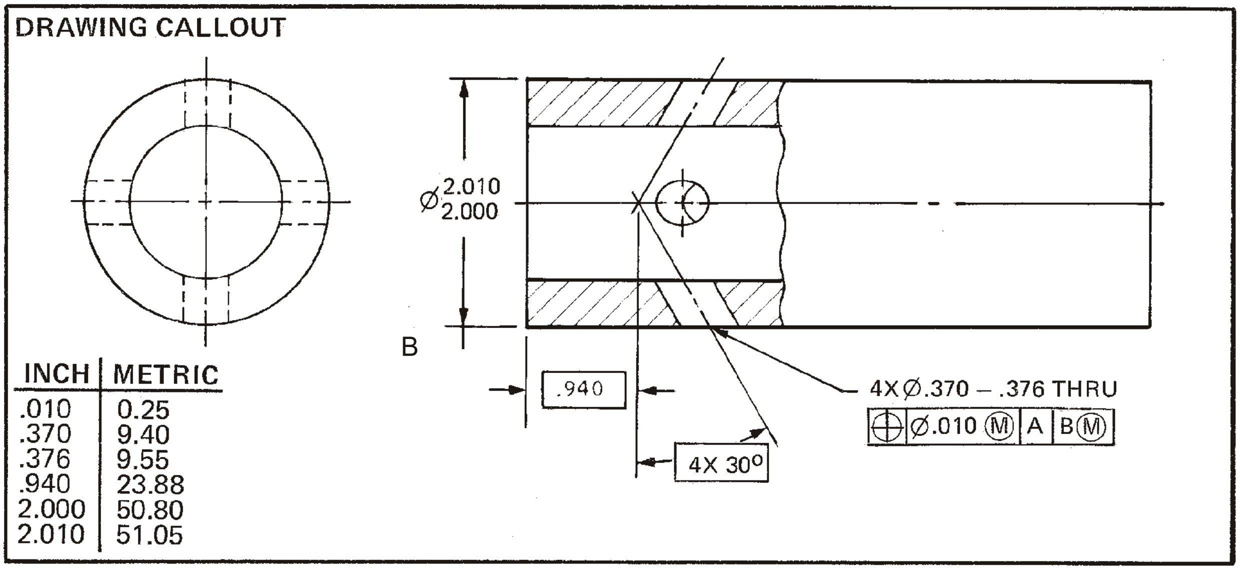

INCH	METRIC
.010	0.25
.370	9.40
.376	9.55
.940	23.88
2.000	50.80
2.010	51.05

INTERPRETATION

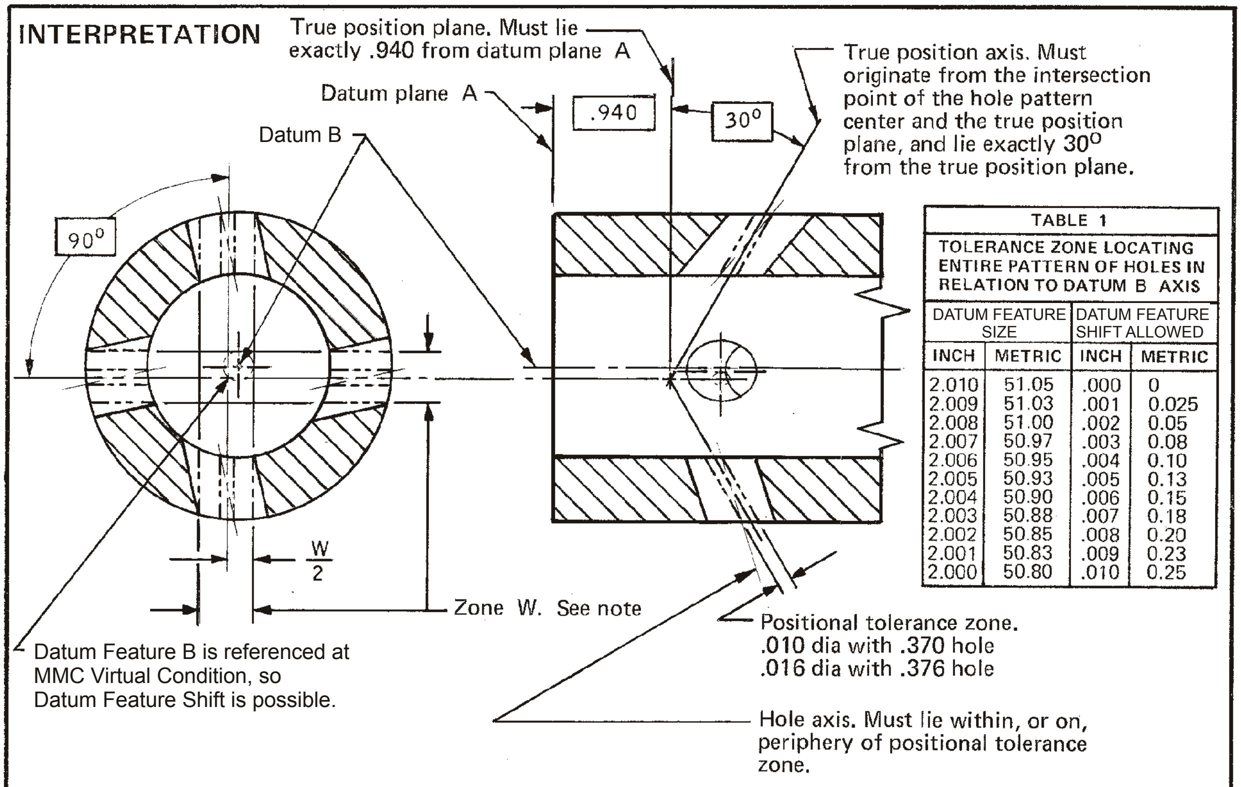

True position plane. Must lie exactly .940 from datum plane A

True position axis. Must originate from the intersection point of the hole pattern center and the true position plane, and lie exactly 30° from the true position plane.

Datum Feature B is referenced at MMC Virtual Condition, so Datum Feature Shift is possible.

Positional tolerance zone. .010 dia with .370 hole .016 dia with .376 hole

Hole axis. Must lie within, or on, periphery of positional tolerance zone.

TABLE 1

TOLERANCE ZONE LOCATING ENTIRE PATTERN OF HOLES IN RELATION TO DATUM B AXIS

DATUM FEATURE SIZE		DATUM FEATURE SHIFT ALLOWED	
INCH	METRIC	INCH	METRIC
2.010	51.05	.000	0
2.009	51.03	.001	0.025
2.008	51.00	.002	0.05
2.007	50.97	.003	0.08
2.006	50.95	.004	0.10
2.005	50.93	.005	0.13
2.004	50.90	.006	0.15
2.003	50.88	.007	0.18
2.002	50.85	.008	0.20
2.001	50.83	.009	0.23
2.000	50.80	.010	0.25

NOTE: ZONE W EQUALS THE MMC HOLE MINUS THE POSITIONAL TOLERANCE

e.g. .370 – .010 = .360

THE HOLES MAY DEVIATE FROM TRUE POSITION PROVIDED ZONE W IS NOT VIOLATED AND THE HOLES ARE WITHIN LIMITS OF SIZE.

ANGULAR RADIAL HOLES LOCATED BY BASIC DIMENSION AT AXIS OF O.D.
FIGURE 5-171

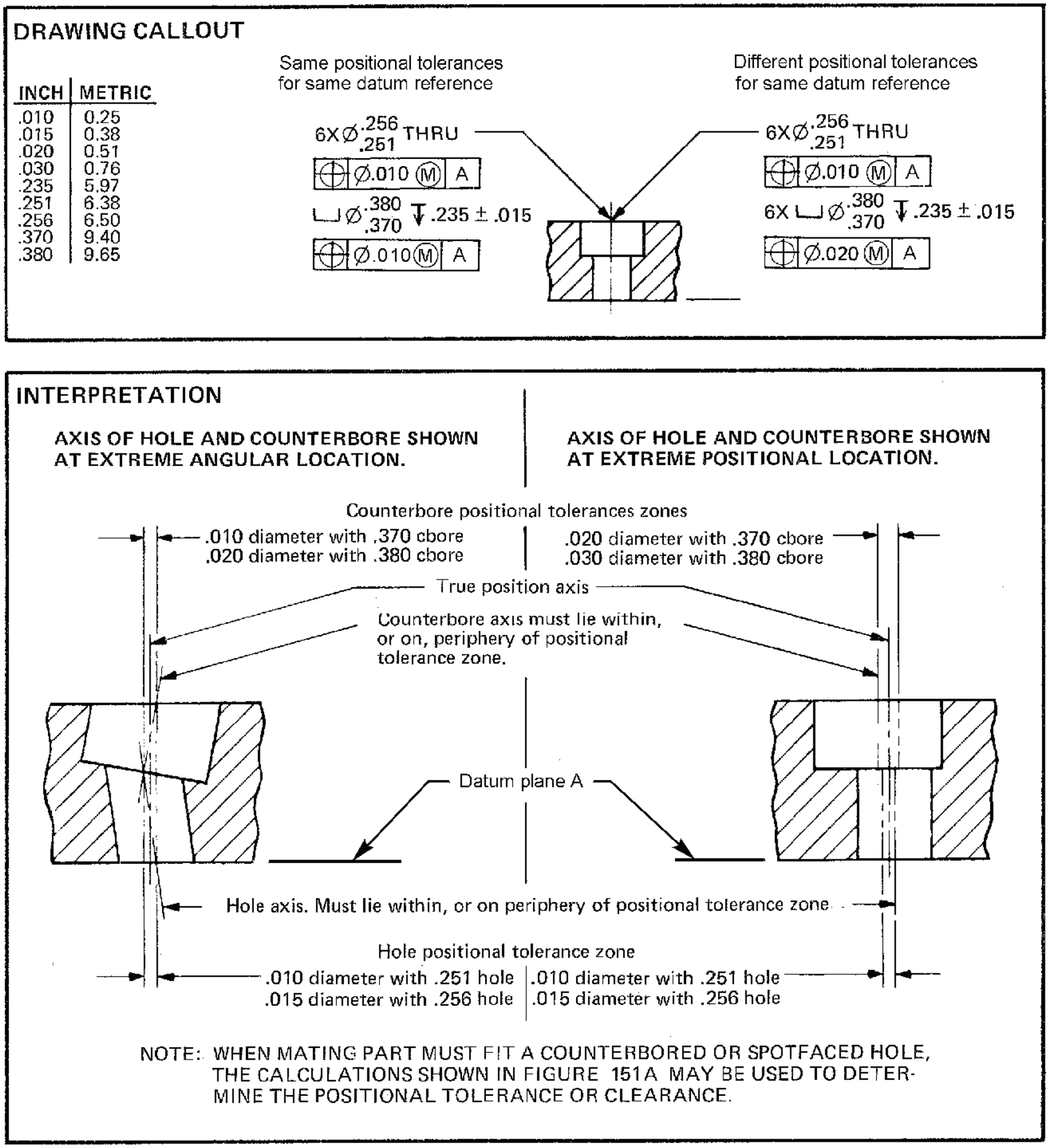

INCH	METRIC
.010	0.25
.015	0.38
.020	0.51
.030	0.76
.235	5.97
.251	6.38
.256	6.50
.370	9.40
.380	9.65

NOTE: WHEN MATING PART MUST FIT A COUNTERBORED OR SPOTFACED HOLE, THE CALCULATIONS SHOWN IN FIGURE 151A MAY BE USED TO DETERMINE THE POSITIONAL TOLERANCE OR CLEARANCE.

POSITION OF COAXIAL MULTIFEATURES IN A SINGLE CALLOUT
FIGURE 5-172

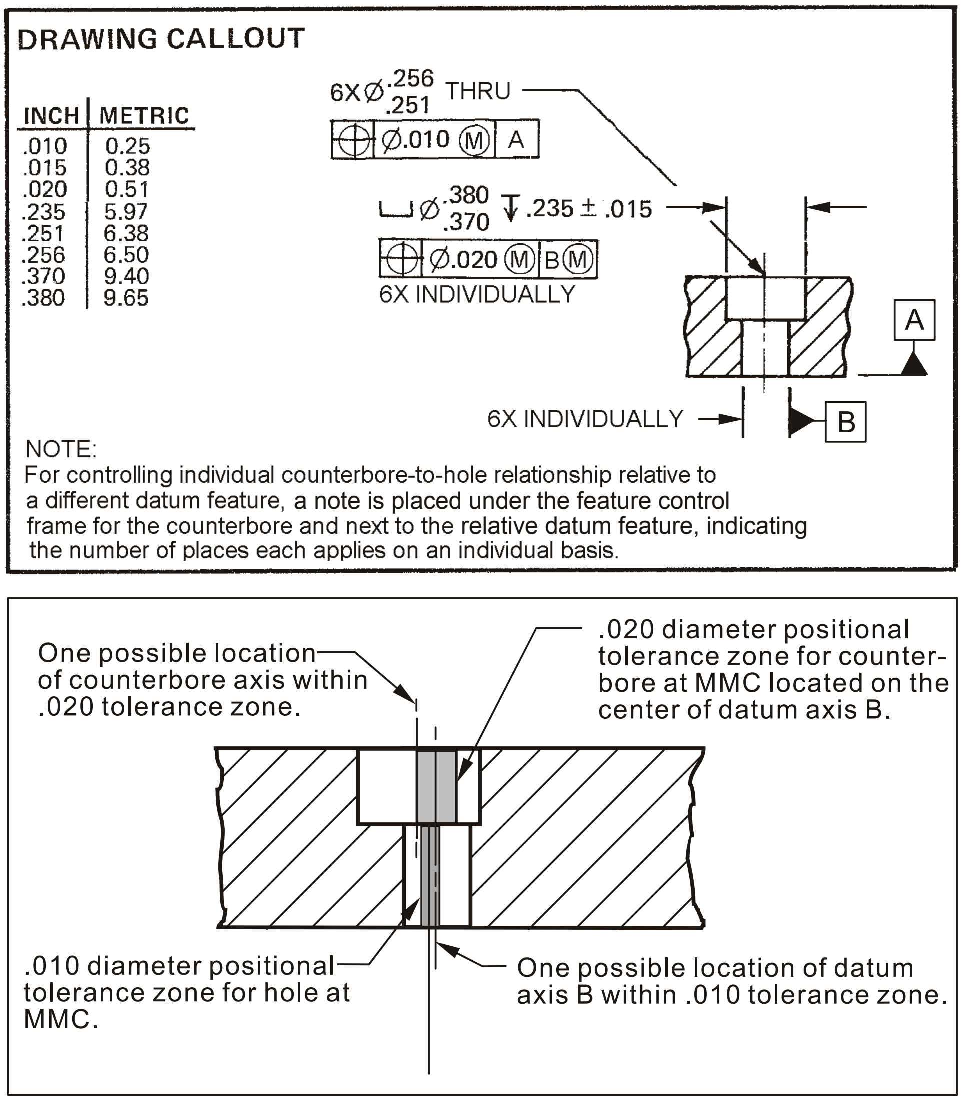

INCH	METRIC
.010	0.25
.015	0.38
.020	0.51
.235	5.97
.251	6.38
.256	6.50
.370	9.40
.380	9.65

NOTE:
For controlling individual counterbore-to-hole relationship relative to a different datum feature, a note is placed under the feature control frame for the counterbore and next to the relative datum feature, indicating the number of places each applies on an individual basis.

INDIVIDUAL DATUM FEATURE REFERENCING:
REPETITIVE (RELATIVE) DATUM FEATURE REFERENCING
FIGURE 5-173

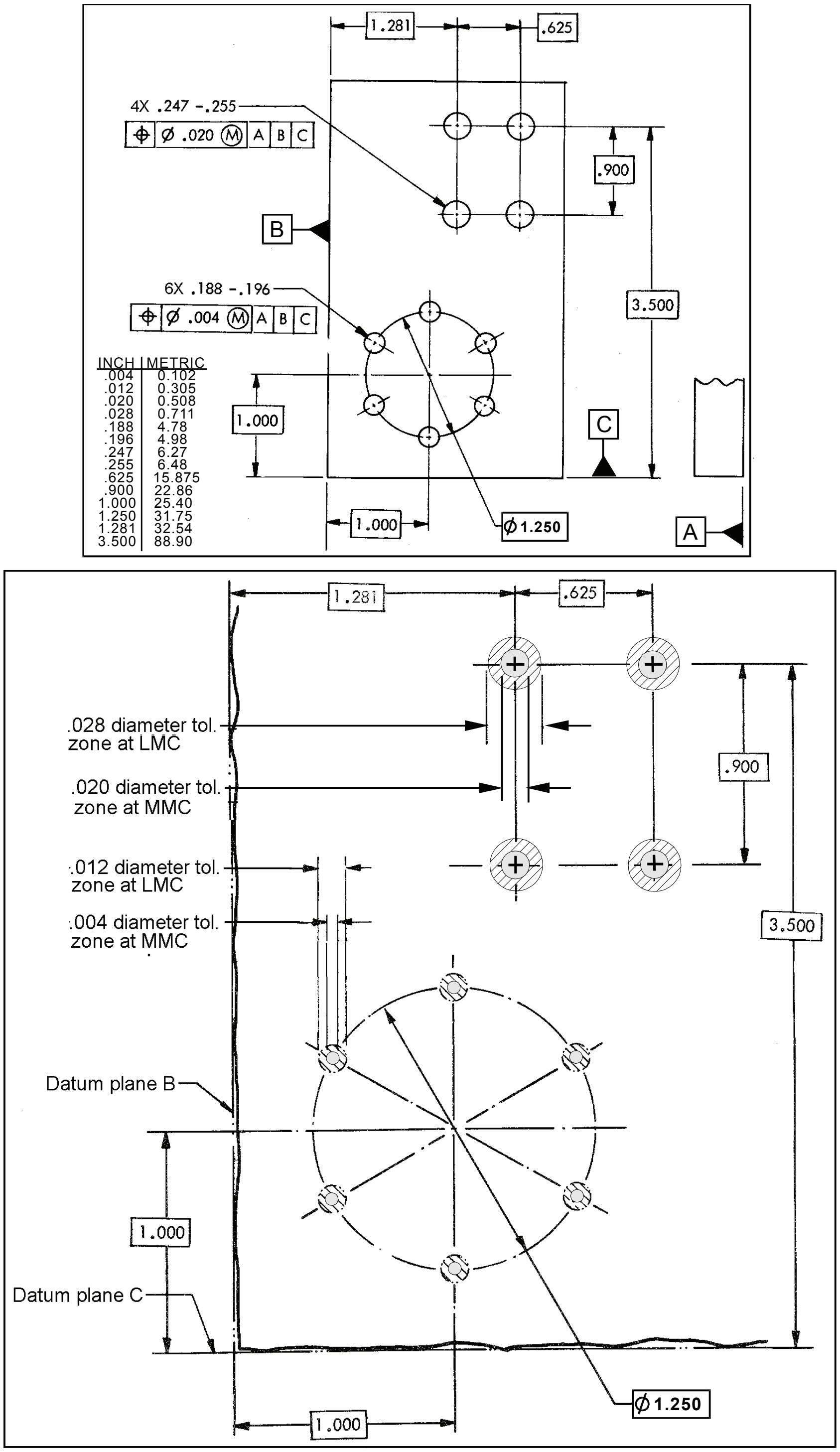

INCH	METRIC
.004	0.102
.012	0.305
.020	0.508
.028	0.711
.188	4.78
.196	4.98
.247	6.27
.255	6.48
.625	15.875
.900	22.86
1.000	25.40
1.250	31.75
1.281	32.54
3.500	88.90

<u>TOLERANCE ZONES FOR SIMULTANEOUS REQUIREMENTS WHERE MULTIPLE PATTERNS OF FEATURES ARE RELATED TO THE SAME DATUM REFERENCE FRAME</u>

FIGURE 5-174

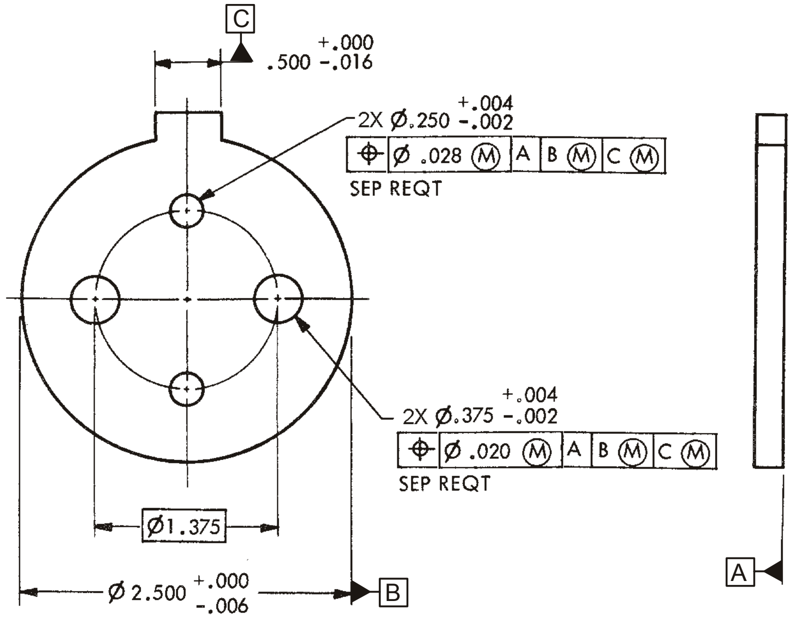

INCH	METRIC
.002	0.05
.004	0.10
.006	0.15
.016	0.41
.020	0.51
.028	0.71
.250	6.35
.375	9.52
.500	12.70
1.375	34.92
2.500	63.50

NOTE:

Whenever it is desired to treat patterns of features as separate patterns, the notation "SEP REQT" (Separate Requirement) is placed beneath each feature control frame. This allows the group of tolerance zones controlled by each feature control frame to be independently related to the datum reference frame. If no note is added under the feature control frames, the patterns are to be treated as a single pattern. Both patterns must reference the same datum reference frame. The same technique applies where multiple feature control frames each only define a single tolerance zone; if the notation “SEP REQT” is added to each feature control frame, the tolerance zone defined by each feature control frame would also be a separate requirement.

MULTIPLE PATTERNS OF FEATURES, SEPARATE REQUIREMENTS BASED ON A MMC BASIS WHERE DATUMS ARE SUBJECT TO SIZE TOLERANCES
FIGURE 5-175

5.15.12 Composite Positional Tolerancing. Composite positional tolerancing is used where the relationship of one or more features to a datum reference frame is less critical than the feature-to-feature relationship. Composite feature control frames include one geometric characteristic symbol, and multiple horizontal segments that describe the successive tiers of tolerances. The upper segment is no different than a traditional single-segment feature control frame; it has the same meaning as if it was expressed in a single-segment feature control frame. The datum features referenced in the feature control frame orient and locate the tolerance zones to the specified datum reference frame. Datum features referenced in the lower segments of a composite feature control frame only orient the tolerance zones to the specified datum reference frame (if datum features are referenced). The tolerance value in the uppermost segment of a composite feature control frame is typically the largest tolerance value; the tolerance value in each successive lower segment is usually smaller than the tolerance values above it. See FIGURES 5-176 and 5-177.

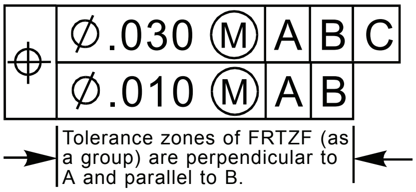

Tolerance zones of FRTZF (as a group) are perpendicular to A and parallel to B.

INCH	METRIC
.010	0.25
.030	0.76

5.15.13 Two Single-Segment Feature Control Frames Invoking Basic Dimensions Along with Datum Feature References. Two single-segment feature control frames, each with a different datum reference frame, are used to relate positional tolerance zones to more than one datum reference frame. Often the goal is allow greater variation in one direction to related datum reference frames, such as A,B,C and A,B as shown below. The fundamental difference between the composite feature control frame and the two single-segment feature control frame lies within the tolerance zones of the lower entry of feature control frame referred to as Feature-Relating Tolerancing Zone Framework (FRTZF) as shown in the examples that precede and follow this paragraph. The single-segment feature control frames may be stacked vertically if desired. See below and FIGURE 5-178.

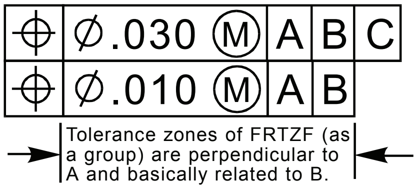

INCH	METRIC
.010	0.25
.030	0.76

See FIGURES 5-177 and 5-178 for comparisons between composite and single segment positional tolerances.

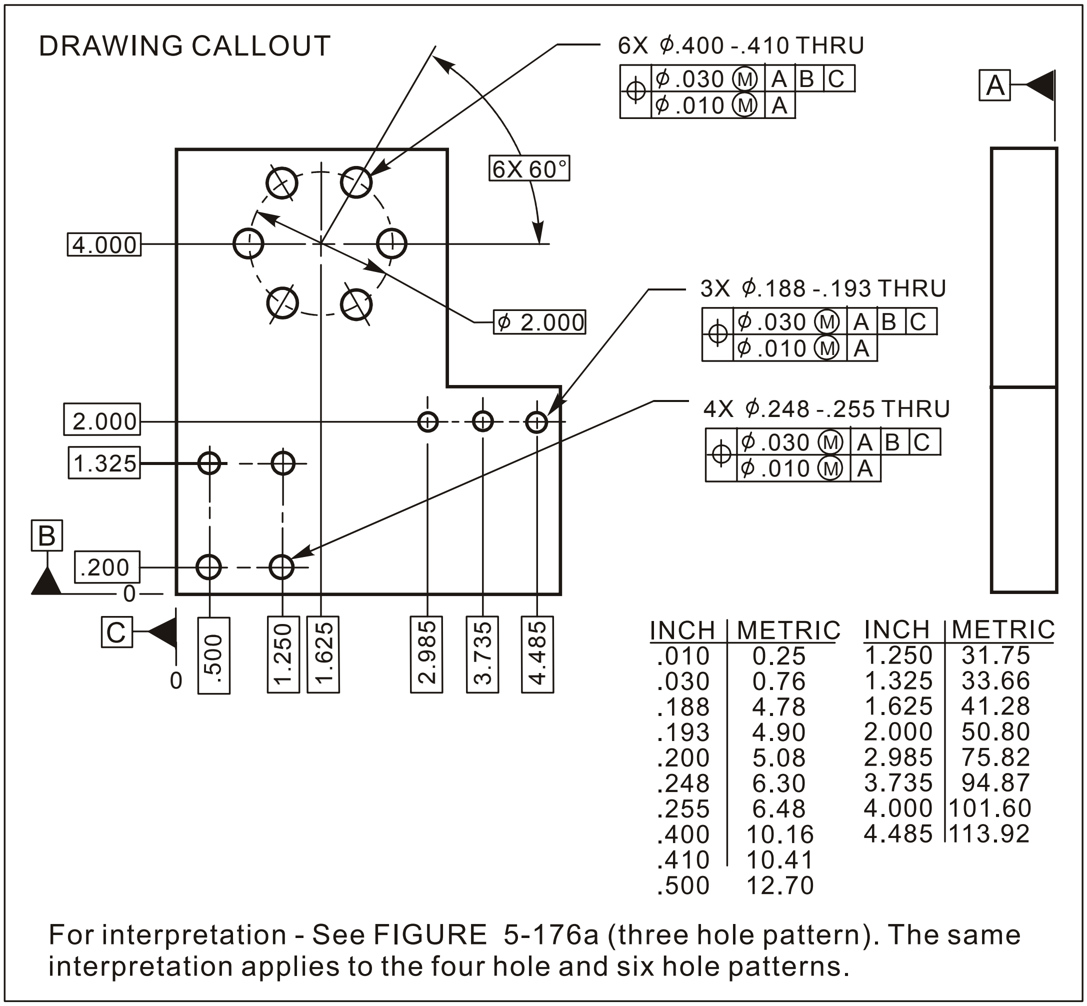

INCH	METRIC
.010	0.25
.030	0.76
.188	4.78
.193	4.90
.200	5.08
.248	6.30
.255	6.48
.400	10.16
.410	10.41
.500	12.70

INCH	METRIC
1.250	31.75
1.325	33.66
1.625	41.28
2.000	50.80
2.985	75.82
3.735	94.87
4.000	101.60
4.485	113.92

For interpretation - See FIGURE 5-176a (three hole pattern). The same interpretation applies to the four hole and six hole patterns.

HOLE PATTERNS LOCATED BY COMPOSITE POSITIONAL TOLERANCING
WITH PRIMARY DATUM FEATURE REFERENCED IN LOWER SEGMENT
FIGURE 5-177

INTERPRETATION OF FIGURE 5-176

⌖ | ⌀.030Ⓜ | A | B | C (PLTZF)

Upper part of the feature control frame is the Pattern Locating Tolerance Zone Framework (PLTZF) and is located from specified datums by Basic dimensions. Axis of holes must lie within .030 diameter pattern locating tolerance zones.

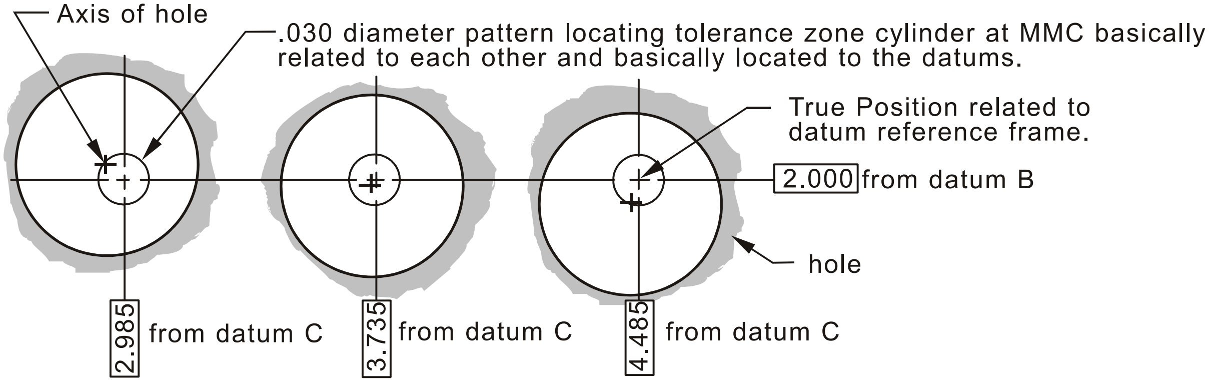

EXAMPLE OF A SINGLE DISPLACEMENT OF EACH HOLE RELATIVE TO PATTERN-LOCATING TOLERANCE ZONE FRAMEWORK (PLTZF).

⌖ | ⌀.010Ⓜ | A (FRTZF)

Lower segment of the feature control frame is the Feature Relating Tolerance Zone Framework (FRTZF). Basic dimensions locating the tolerance zones to the datum reference frame do not apply; the tolerance zones are oriented (perpendicular) to datum A, and are basically located to one another. The Ø.010 lower segment tolerance zones may translate and/or rotate within the larger zones.

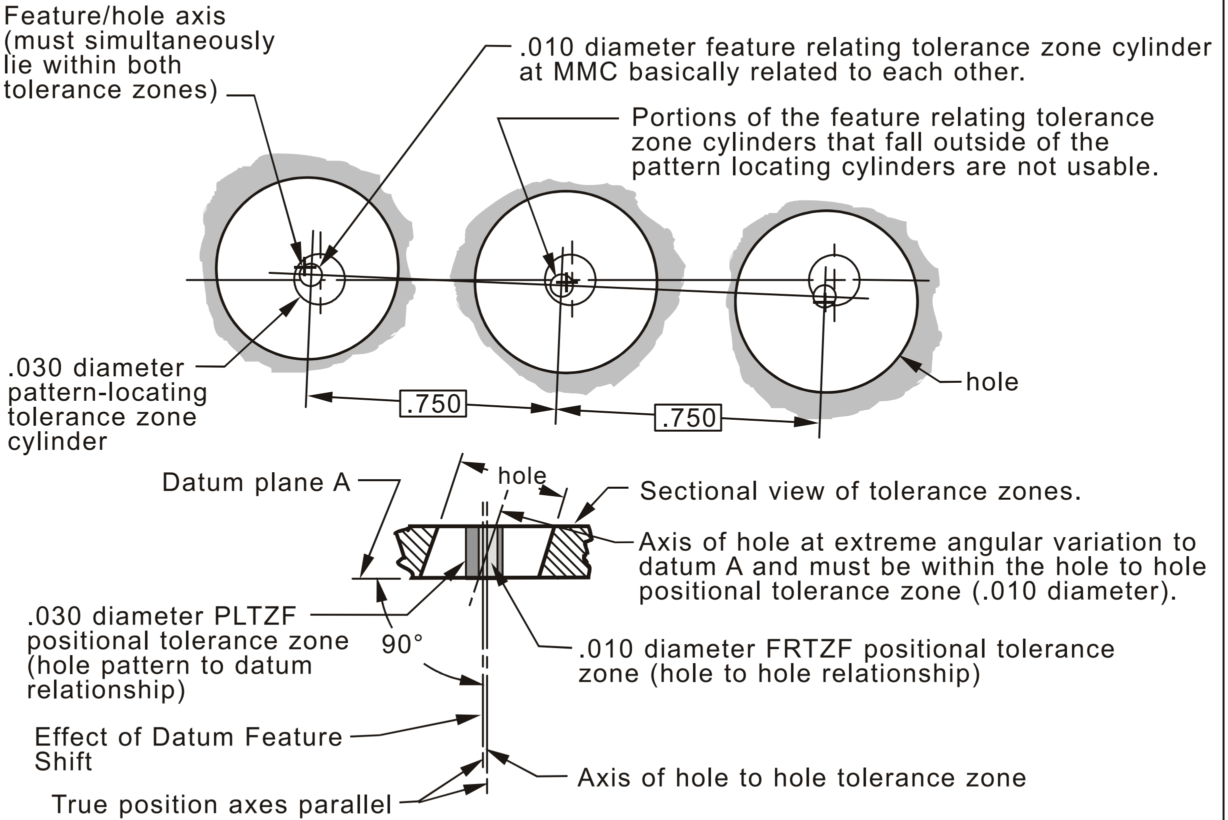

EXAMPLE OF A SINGLE DISPLACEMENT OF FEATURE-RELATING TOLERANCE ZONE FRAMEWORK (FRTZF) TO PATTERN-LOCATING TOLERANCE ZONE FRAMEWORK (PLTZF)

TOLERANCE ZONES FOR THREE-HOLE PATTERN SHOWN IN FIGURE 5-176
FIGURE 5-176a

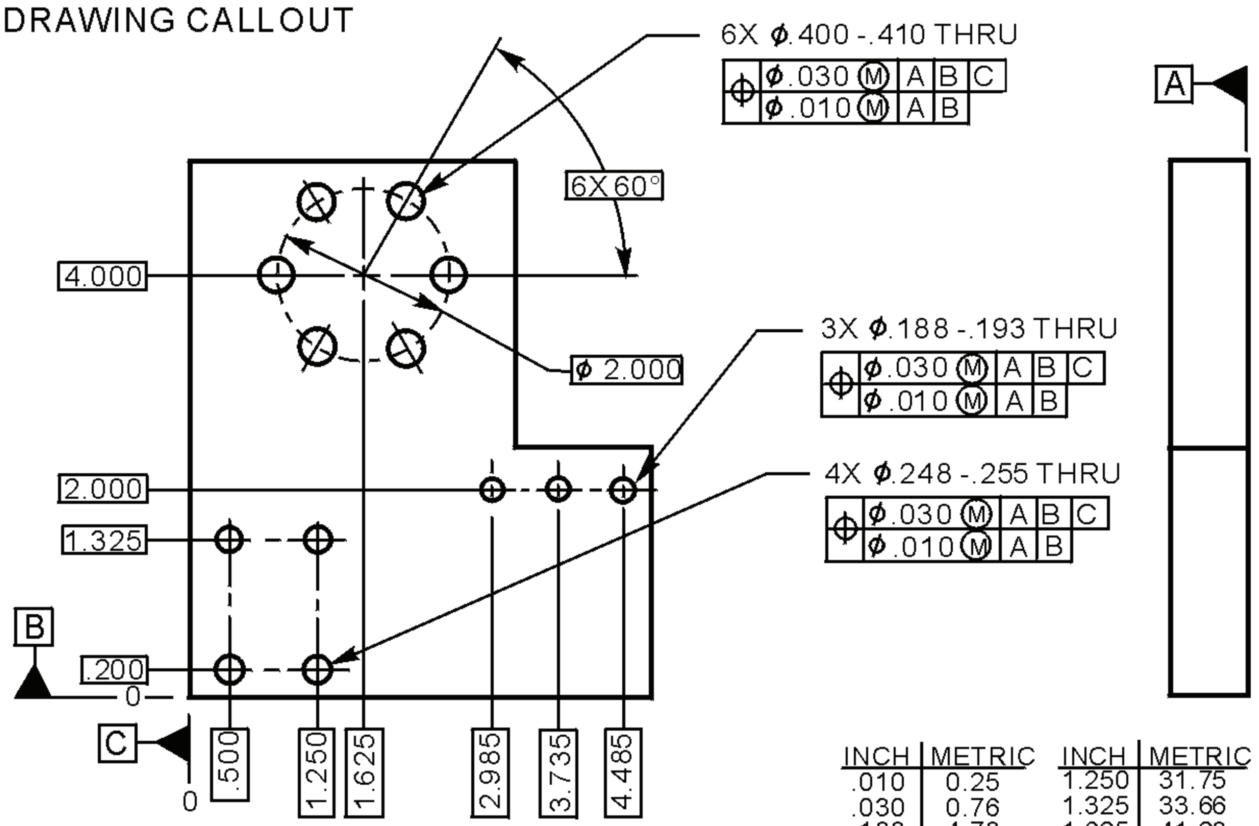

INCH	METRIC	INCH	METRIC
.010	0.25	1.250	31.75
.030	0.76	1.325	33.66
.188	4.78	1.625	41.28
.193	4.90	2.000	50.80
.200	5.08	2.985	75.82
.248	6.30	3.735	94.87
.255	6.48	4.000	101.60
.400	10.16	4.485	113.92
.410	10.41		
.500	12.70		

For interpretation - See FIGURE 5-177a (three hole pattern). The same interpretation apply to the four and six hole pattern.

HOLE PATTERNS LOCATED BY COMPOSITE POSITIONAL TOLERANCING
WITH PRIMARY AND SECONDARY DATUM FEATURES REFERENCED IN LOWER SEGMENT
(SIMILAR TO FIGURE 5-176)
FIGURE 5-177

INTERPRETATION OF FIGURE 5-177

⌖ | ⌀.030Ⓜ | A | B | C | (PLTZF)

Upper part of the feature control frame is the Pattern Locating Tolerance Zone Framework (PLTZF) and is located from specified datums by Basic dimensions. Axis of holes must lie within .030 diameter pattern locating tolerance zones.

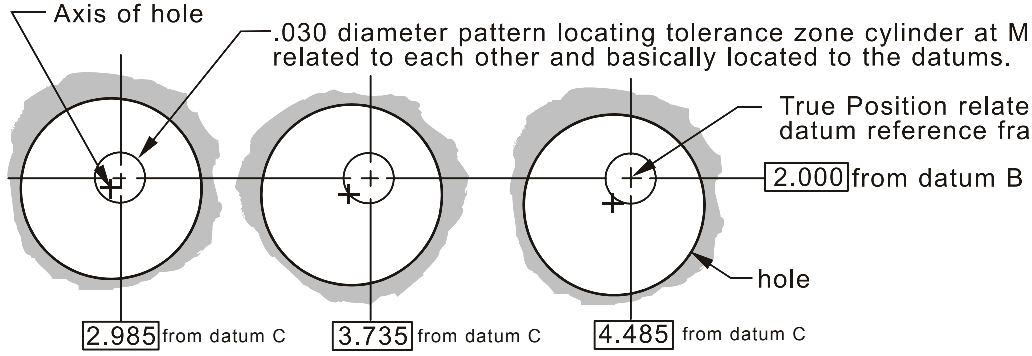

EXAMPLE OF A SINGLE DISPLACEMENT OF EACH HOLE RELATIVE TO PATTERN-LOCATING TOLERANCE ZONE FRAMEWORK (PLTZF).

⌖ | ⌀.010Ⓜ | A | B
(FRTZF)

Lower segment of the feature control frame is the Feature Relating Tolerance Zone Framework (FRTZF). Basic dimensions locating the tolerance zones to the datum reference frame do not apply; the tolerance zones are oriented to datums A and B, and are basically located to one another. The Ø.010 lower segment tolerance zones may only translate within the larger zones.

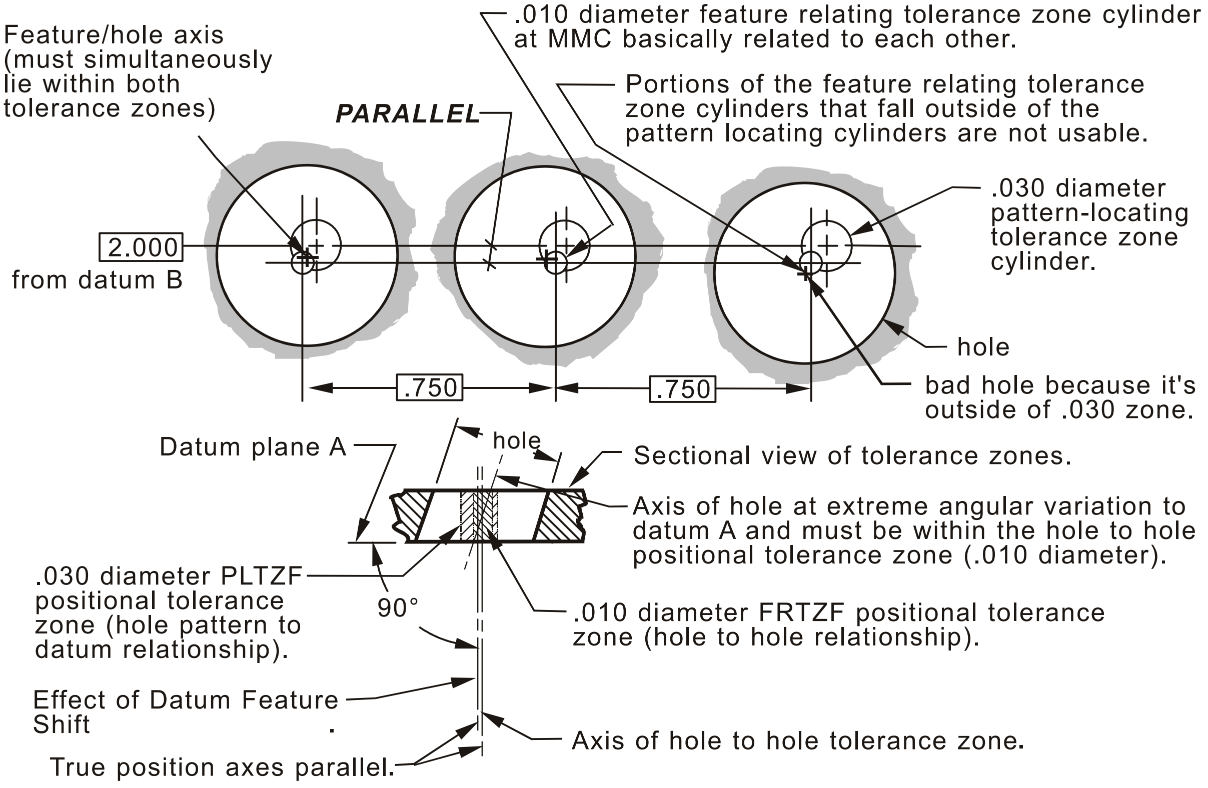

EXAMPLE OF A SINGLE DISPLACEMENT OF FEATURE-RELATING TOLERANCE ZONE FRAMEWORK (FRTZF) TO PATTERN-LOCATING TOLERANCE ZONE FRAMEWORK (PLTZF)

TOLERANCE ZONES FOR THREE-HOLE PATTERN SHOWN IN FIGURE 5-177

FIGURE 5-177a

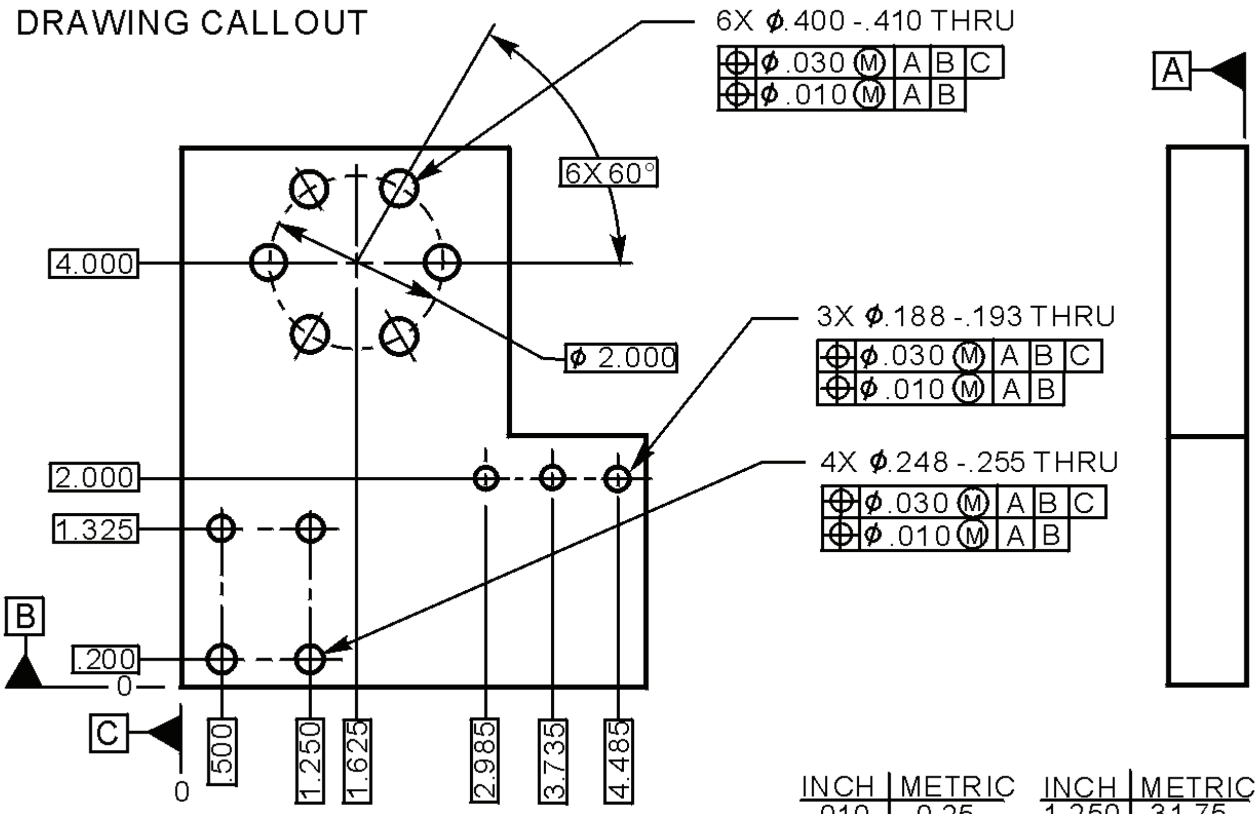

INCH	METRIC	INCH	METRIC
.010	0.25	1.250	31.75
.030	0.76	1.325	33.66
.188	4.78	1.625	41.28
.193	4.90	2.000	50.20
.200	5.08	2.985	75.82
.248	6.30	3.735	94.87
.255	6.48	4.000	101.60
.400	10.16	4.485	113.92
.410	10.41		
.500	12.70		

For interpretation - See FIGURE 5-178a (three hole pattern). The same interpretation apply to the four and six hole pattern.

HOLE PATTERNS LOCATED BY TWO SINGLE-SEGMENT FEATURE CONTROL FRAMES WITH SECONDARY DATUM IN LOWER FEATURE CONTROL FRAME
FIGURE 5-178

INTERPRETATION OF FIGURE 5-178

⌖ | ⌀.030Ⓜ | A | B | C (PLTZF)
⌖

Upper part of the feature control frame is the Pattern Locating Tolerance Zone Framework (PLTZF) and is located from specified datums by Basic dimensions. Axis of holes must lie within .030 diameter pattern locating tolerance zones.

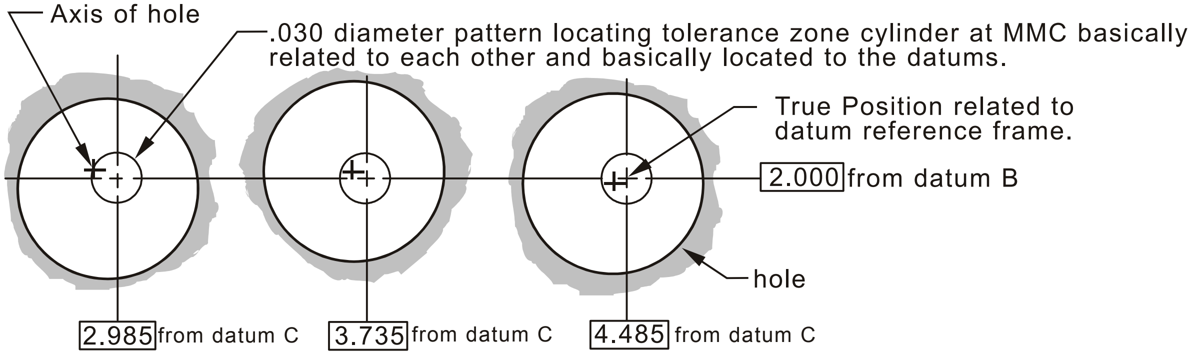

EXAMPLE OF A SINGLE DISPLACEMENT OF EACH HOLE RELATIVE TO PATTERN-LOCATING TOLERANCE ZONE FRAMEWORK (PLTZF).

⌖
⌖ | ⌀.010Ⓜ | A | B
(FRTZF)

Lower segment of the feature control frame is the Feature Relating Tolerance Zone Framework (FRTZF). The lower segment tolerance zones are basically located and basically oriented to datums A and B, and are basically located to one another. However, the lower segment tolerance zones are not related to datum C, so they are free to translate within the larger zones with respect to datum C.

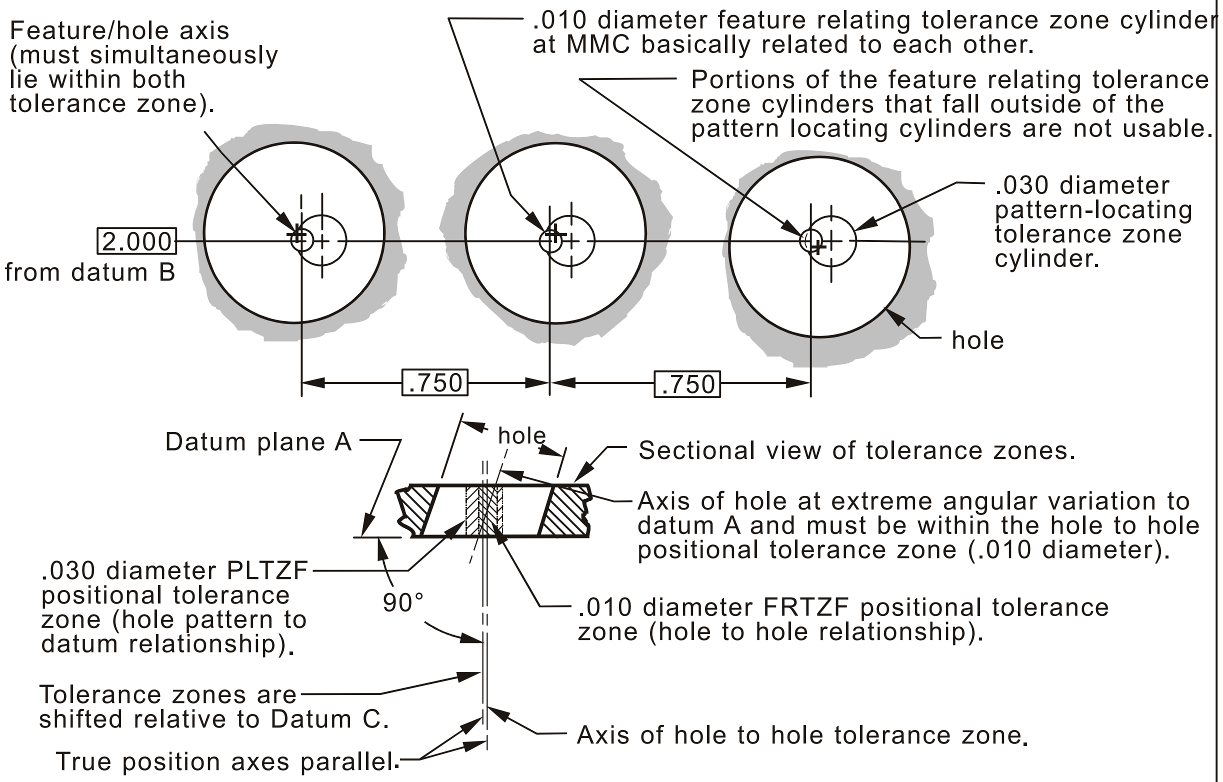

EXAMPLE OF A SINGLE DISPLACEMENT OF FEATURE-RELATING TOLERANCE ZONE FRAMEWORK (FRTZF) TO PATTERN-LOCATING TOLERANCE ZONE FRAMEWORK (PLTZF)

TOLERANCE ZONES FOR THREE-HOLE PATTERN SHOWN IN FIGURE 5-178
FIGURE 5-178a

INCH	METRIC
.005	0.13
.006	0.15
.020	0.51
.040	1.02
.750	19.05
2.000	50.80
5.000	127.00
6.172	156.77
6.250	158.75

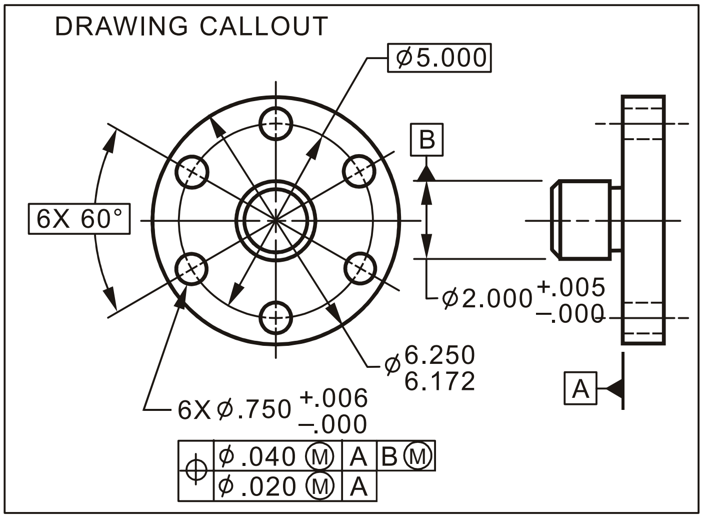

COMPOSITE POSITIONAL TOLERANCING OF A CIRCULAR PATTERN OF FEATURES
FIGURE 5-179

INTERPRETATION OF FIGURE 5-179

⌖	⌀.040 Ⓜ	A	BⓂ

(PLTZF) Pattern Locating Tolerance Zone Framework. Located from specific datums. Axis of holes must lie within .040 diameter pattern locating tolerance zones.

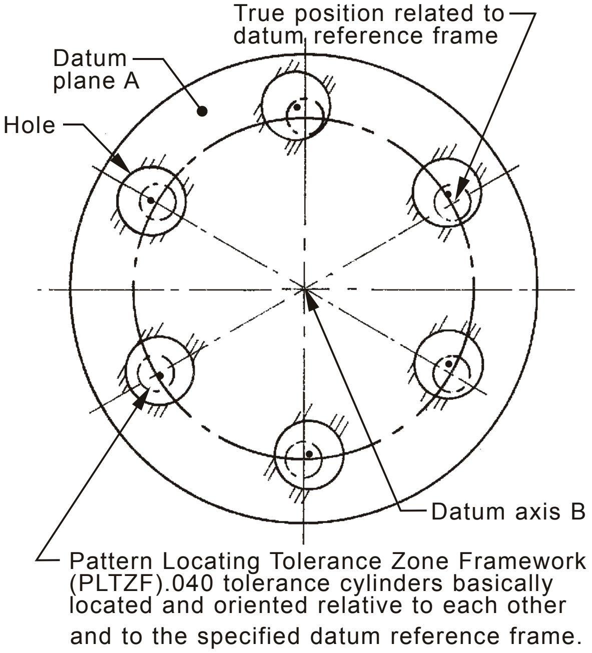

Example of a single displacement relative to the Pattern Locating Tolerance Zone Framework. (PLTZF)

FIGURE 5-179a

INTERPRETATION OF FIGURE 5-179

⌖			
	⌀.020 Ⓜ	A	

Perpendicular to datum A, same as for FIGURE 5-176a.

(FRTZF) Feature Relating Tolerance Zone Framework. Location to specific datums is not applicable and the hole pattern is free to be located and orientated (shift and/or tilt) radially within the boundaries established and controlled by the PLTZF

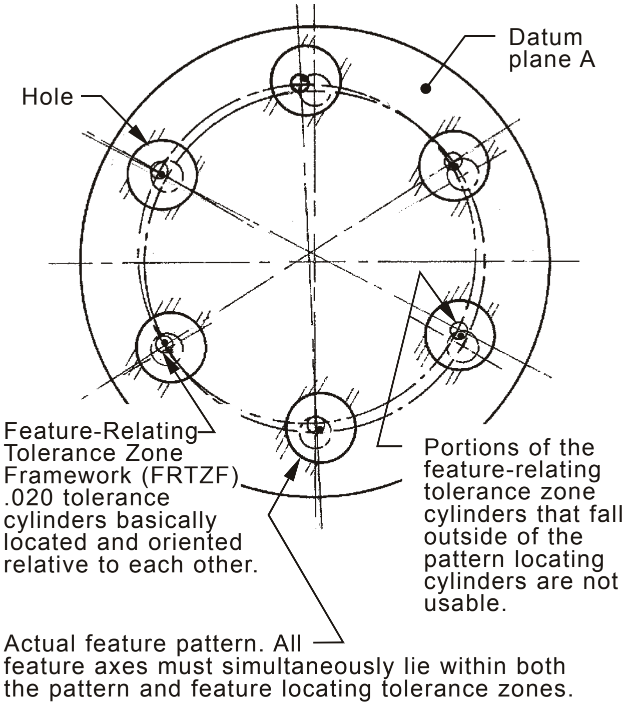

Example of a single displacement relative to Feature Relating Tolerance Zone Framework(FRTZF)to the PLTZF.

FIGURE 5-179b

INCH	METRIC
.005	0.13
.006	0.15
.010	0.25
.030	0.76
.250	6.35
.750	19.05
2.000	50.80
5.000	127.00
6.172	156.77
6.250	158.75

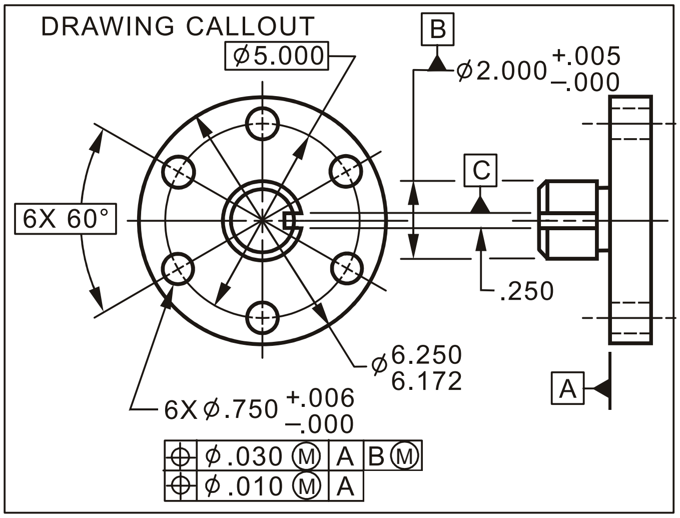

POSITIONAL TOLERANCING WITH MULTIPLE SINGLE-SEGMENT FEATURE CONTROL FRAME OF A CIRCULAR PATTERN OF FEATURE

FIGURE 5-180

INTERPRETATION OF FIGURE 5-180

⌖	⌀.030 Ⓜ	A	BⓂ
⌖			

(PLTZF) Pattern Locating Tolerance Zone Framework. Located from specific datums. Axis of holes must lie within .030 diameter pattern locating tolerance zones.

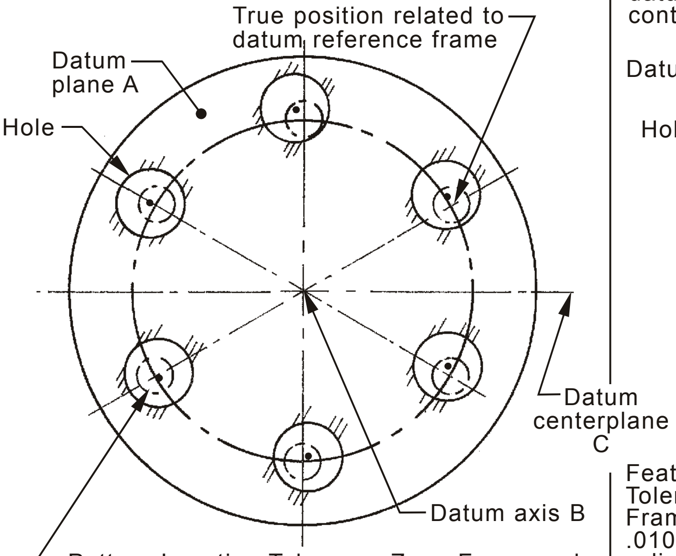

Pattern Locating Tolerance Zone Framework (PLTZF).030 tolerance cylinders basically located and oriented relative to each other and to the specified datum reference frame. Verification is independent of the lower segment.

Example of a single displacement relative to the Pattern Locating Tolerance Zone Framework. (PLTZF)

FIGURE 5-180a

INTERPRETATION OF FIGURE 5-180

⌖			
⌖	⌀.020 Ⓜ	A	

Perpendicular to datum A, same as for FIGURE 5-176a.

(FRTZF) Feature Relating Tolerance Zone Framework. Location to specific datums is applicable and the hole pattern is free to be rotate from datum B within the boundaries established and controlled by the PLTZF.

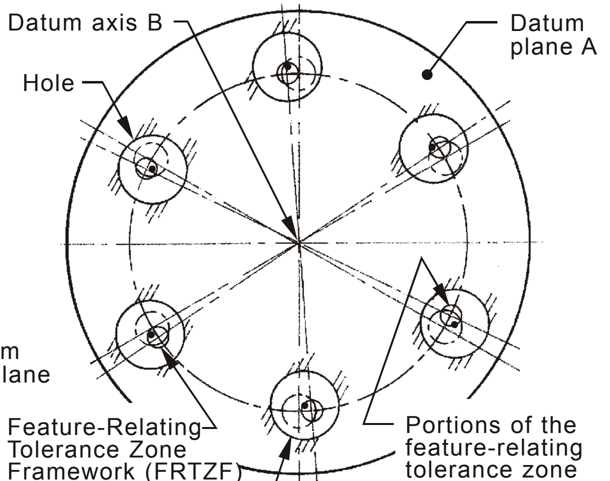

Feature-Relating Tolerance Zone Framework (FRTZF) .010 tolerance cylinders basically located and oriented relative to each other.

Portions of the feature-relating tolerance zone cylinders that fall outside of the pattern locating cylinders are not usable.

Actual feature pattern. All feature axes must simultaneously lie within both the pattern and feature locating tolerance zones.

Example of a single displacement relative to Feature Relating Tolerance Zone Framework (FRTZF)to the PLTZF.

FIGURE 5-180b

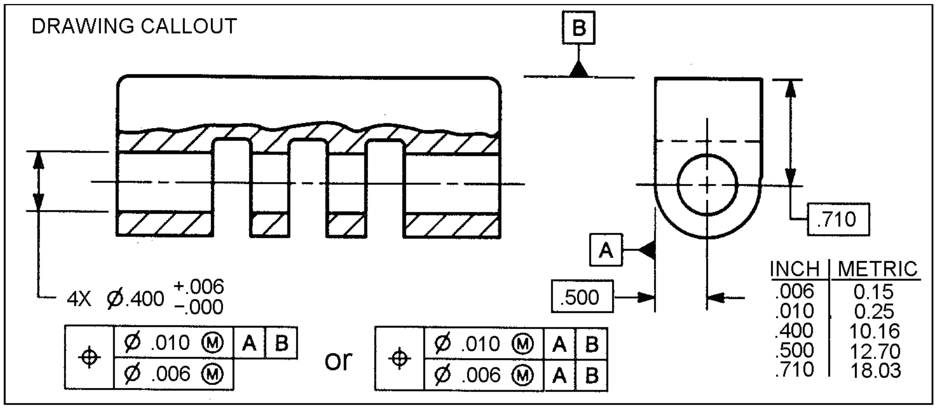

INCH	METRIC
.006	0.15
.010	0.25
.400	10.16
.500	12.70
.710	18.03

⌖ ∅.010 Ⓜ A B
∅.006 Ⓜ
INTERPRETATION

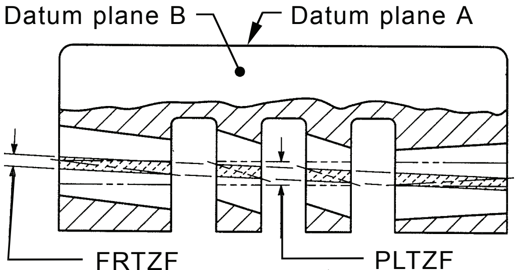

FRTZF
∅ .006 at MMC, four coaxial tolerance zones within which the axes of the holes must lie relative to each other.

PLTZF
∅ .010 at MMC, four coaxial tolerance zones located at true position relative to the specified datums within which the axes of the holes, as a group, must lie.

1. The central axis of the PLTZF cylinders is parallel to datums A and B.
2. Lower Feature Relating Tolerance Zone Framework (FRTZF) DOES NOT invoke orientation datums.
3. The central axis of the FRTZF cylinders may be skewed/tilted relative to the central axis of the PLTZF cylinders.
4. Each individual feature axis may be inclined within its respective tolerance zone cylinder depending upon the actually-produced size of each coaxial feature.

⌖ ∅.010 Ⓜ A B
∅.006 Ⓜ A B
INTERPRETATION

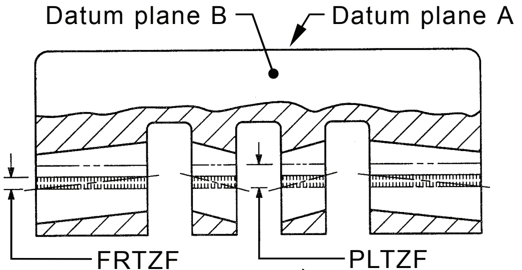

FRTZF
∅ .006 at MMC, four coaxial tolerance zones within which the axes of the holes must lie relative to each other and the two datums.

PLTZF
∅ .010 at MMC, four coaxial tolerance zones located at true position relative to the specified datums within which the axes of the holes, as a group, must lie.

1. The central axis of the PLTZF cylinders is parallel to datums A and B.
2. Lower Feature Relating Tolerance Zone Framework (FRTZF) DOES invoke orientation datums.
3. The central axis of the FRTZF and PLTZF cylinders must be parallel with one another.
4. Each individual feature axis may be inclined within its respective tolerance zone cylinder depending upon the actually-produced size of each coaxial feature.

COMPOSITE POSITIONAL TOLERANCING FOR COAXIAL HOLES OF SIZE
FIGURE 5-181

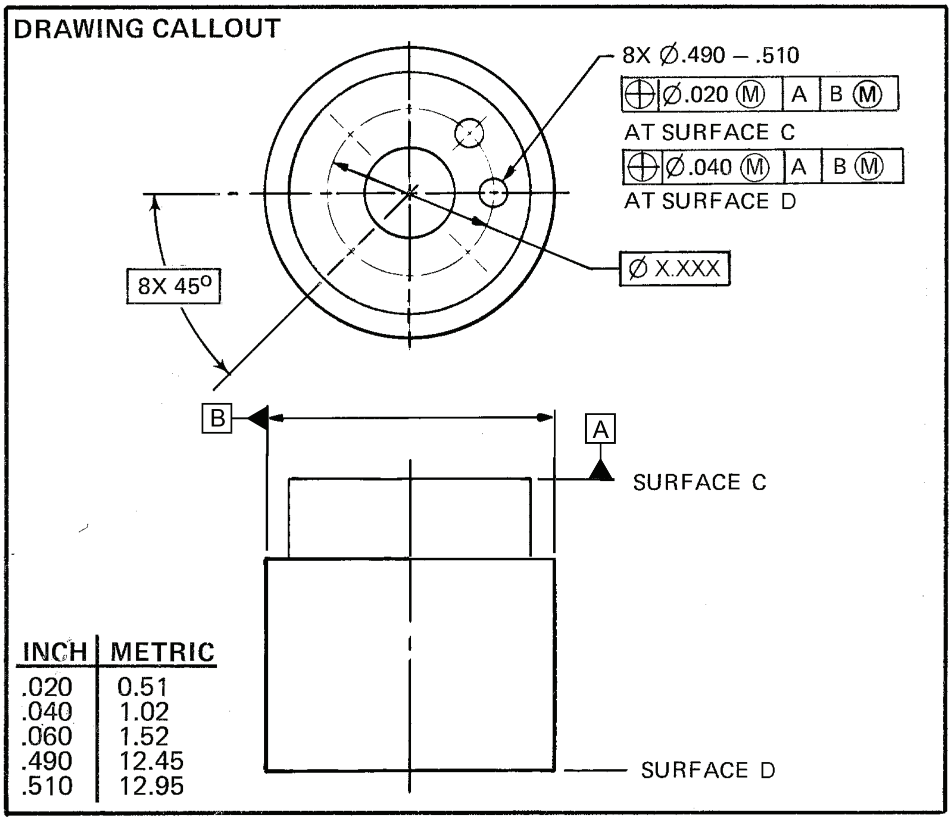

DRAWING CALLOUT

INCH	METRIC
.020	0.51
.040	1.02
.060	1.52
.490	12.45
.510	12.95

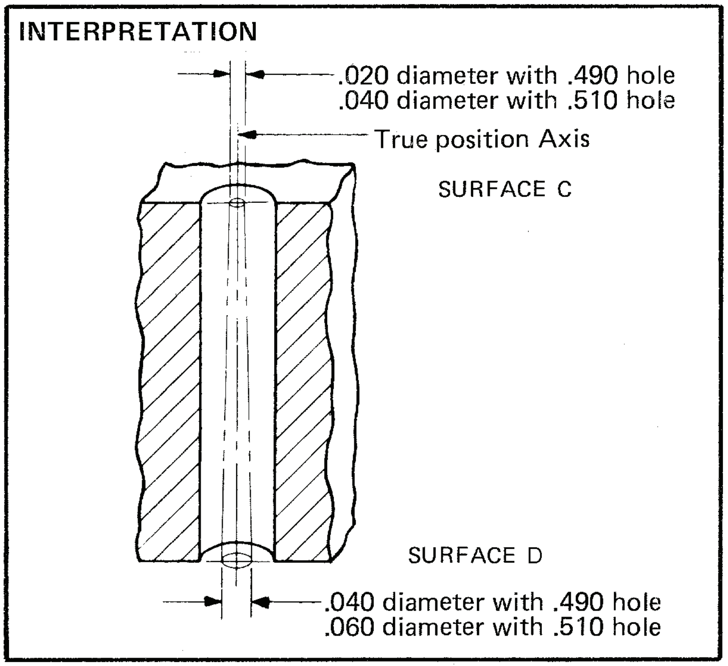

INTERPRETATION

LARGE POSITIONAL TOLERANCE AT ONE END OF HOLE THAN AT THE OTHER END

FIGURE 5-182

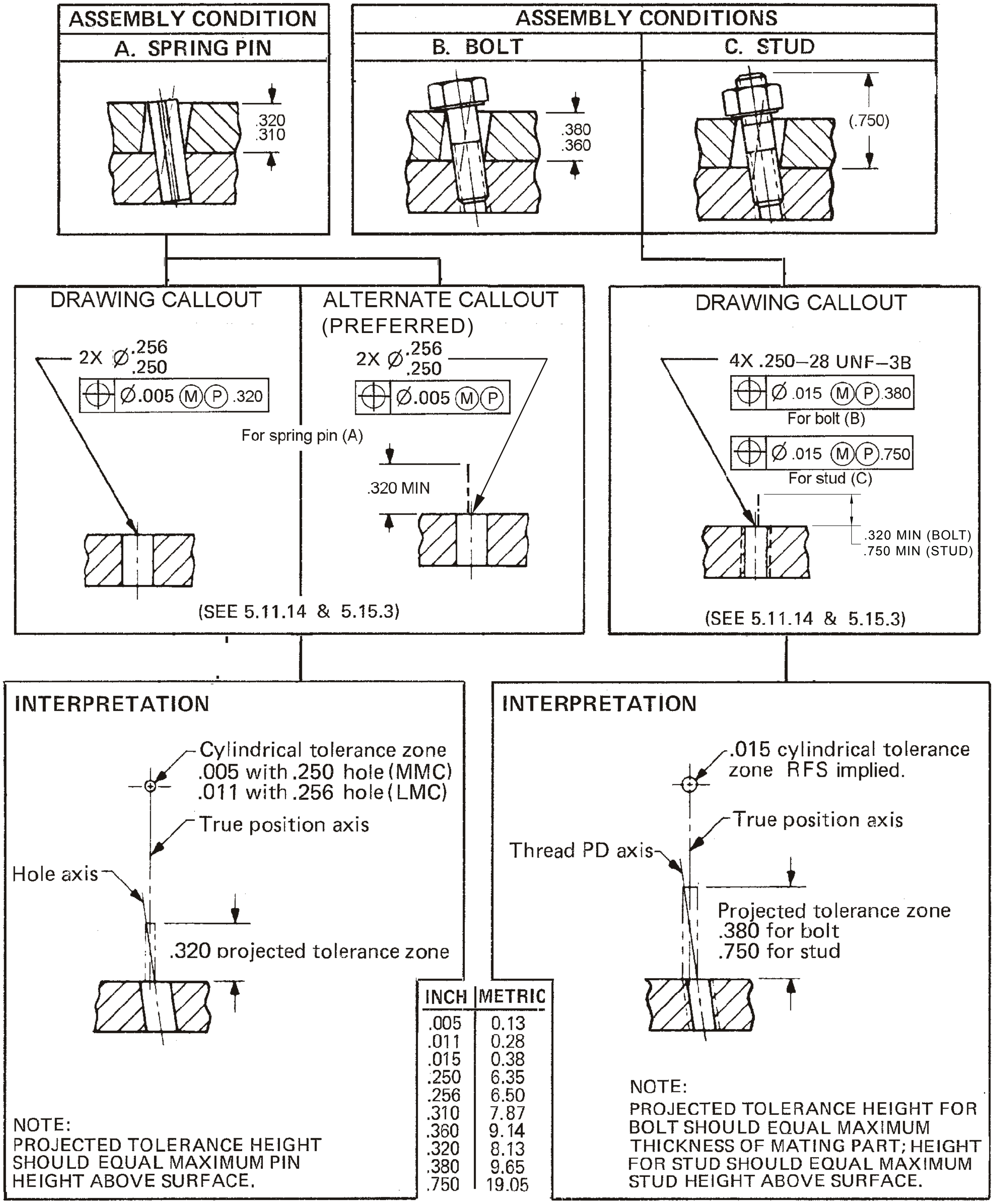

NOTE:
PROJECTED TOLERANCE HEIGHT SHOULD EQUAL MAXIMUM PIN HEIGHT ABOVE SURFACE.

INCH	METRIC
.005	0.13
.011	0.28
.015	0.38
.250	6.35
.256	6.50
.310	7.87
.360	9.14
.320	8.13
.380	9.65
.750	19.05

NOTE:
PROJECTED TOLERANCE HEIGHT FOR BOLT SHOULD EQUAL MAXIMUM THICKNESS OF MATING PART; HEIGHT FOR STUD SHOULD EQUAL MAXIMUM STUD HEIGHT ABOVE SURFACE.

PROJECTED TOLERANCE ZONE
FIGURE 5-183

5.15.14 Symmetry Features Expressed by the Application of Positional Tolerancing. Symmetry is a condition wherein a part or a feature has the same contour and size on opposite sides of a central plane, or a condition in which a feature is symmetrically disposed about a central plane of a datum feature.

5.15.14.1 Symmetry Using Positional Tolerancing (⌖). Where it is required that a feature be located symmetrically with respect to a datum feature, positional tolerancing may be used. This permits the tolerance to be expressed on a MMC basis or on and RFS basis. See FIGURE 5-184.

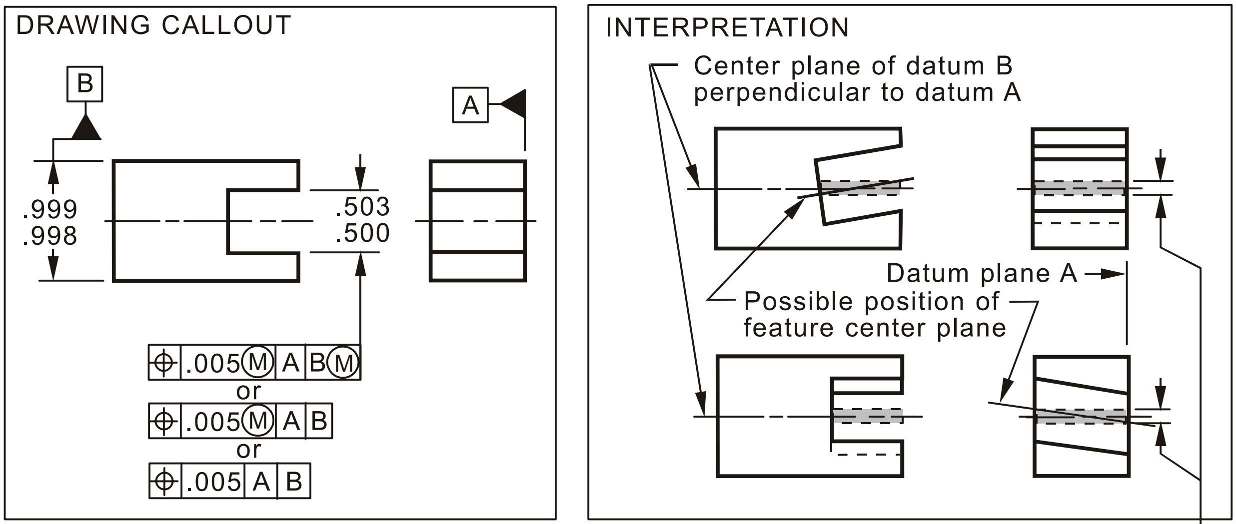

INCH	METRIC
.005	0.13
.500	12.70
.503	12.78
.998	25.35
.999	25.37

INCH	SYMBOL	DATUM FEATURE SIZE	* WIDTH OF TOLERANCE ZONE ALLOWED							
			.999				.998			
		FEATURE SIZE	.500	.501	.502	.503	.500	.501	.502	.503
	⌖ .005Ⓜ A BⓂ		.005	.006	.007	.008	.005	.006	.007	.008
	⌖ .005Ⓜ A B		.005	.006	.007	.008	.005	.006	.007	.008
	⌖ .005 A B	**	.005	.005	.005	.005	.005	.005	.005	.005

* The tolerance zone width stated above is independent from the datum feature shift that may be allowed if datum feature B is referenced at MMC or MMC Virtual Condition.

**The center plane of the actual mating envelope of the slot must lie on or between two parallel planes separated by the width of the tolerance zone as shown, equally disposed about datum center plane B. In this example, the specified tolerance and the datum feature reference both apply on an RFS basis.

METRIC	SYMBOL	DATUM FEATURE SIZE	* WIDTH OF TOLERANCE ZONE ALLOWED							
			25.37				25.35			
		FEATURE SIZE	12.70	12.73	12.75	12.78	12.70	12.73	12.75	12.78
	⌖ 0.13Ⓜ A BⓂ		0.13	0.15	0.18	0.20	0.13	0.15	0.18	0.20
	⌖ 0.13Ⓜ A B		0.13	0.15	0.18	0.20	0.13	0.15	0.18	0.20
	⌖ 0.13 A B	**	0.13	0.13	0.13	0.13	0.13	0.13	0.13	0.13

SYMMETRY CONTROLLED BY TRUE POSITION
FIGURE 5-184

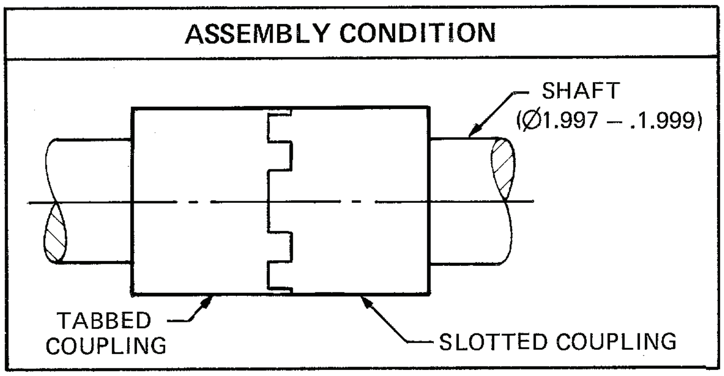

INCH	METRIC
.000	0
.003	0.08
.500	12.70
.502	12.75
.505	12.83
.508	12.90
.510	12.95
2.000	50.80
2.004	50.90

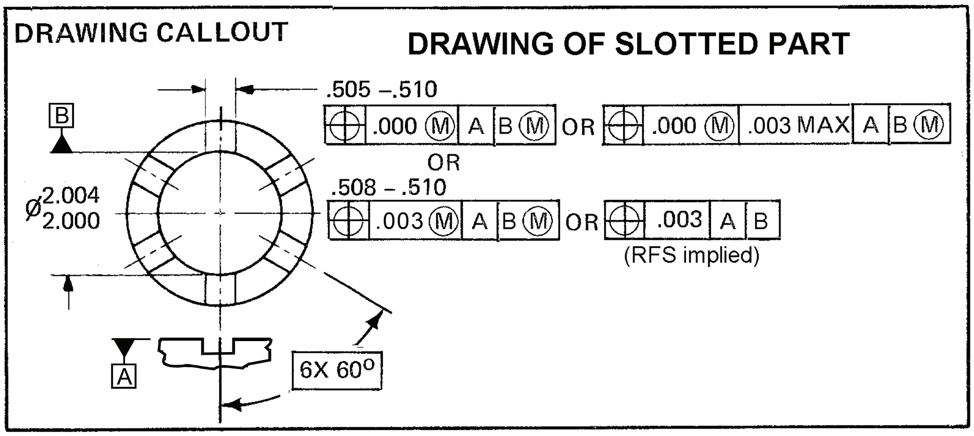

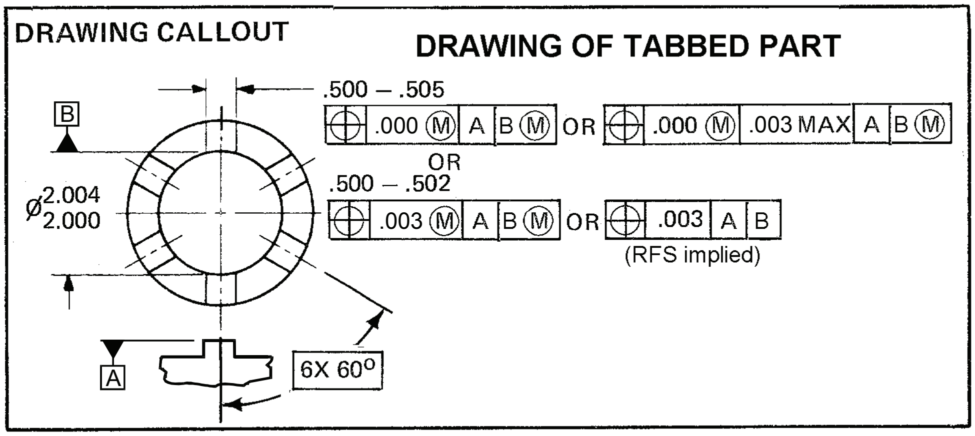

FOR INTERPETATION See FIGURE 5-185a

NOTE: THE FORMULA FOR FIXED FASTENERS MAY BE USED FOR DETERMINING THE TOLERANCE OF A PATTERN OF MATING TABS OR SLOTS.

EXAMPLE: $Y = \frac{H-F}{2}$ $\quad Y = \frac{.505 - .505}{2} = .000$ $\quad$ OR $\quad Y = \frac{.508 - .502}{2} = .003$

WHERE: Y = PERMISSIBLE POSITIONAL TOLERANCE
H = MINIMUM SLOT WIDTH
F = MAXIMUM TAB WIDTH

POSITIONAL TOLERANCING OF TABS AND SLOTS
FIGURE 5-185

INTERPRETATION (OF FIGURE 5-185)

TABLE 1

TOLERANCE ZONE LOCATING ENTIRE PATTERN OF TABS OR SLOTS IN RELATION TO DATUM B AXIS

DATUM FEATURE SIZE		TOL. ZONE SIZE	
INCH	METRIC	INCH	METRIC
2.000	50.80	.000	0
2.001	50.83	.001	0.025
2.002	50.85	.002	0.05
2.003	50.88	.003	0.08
2.004	50.90	.004	0.10

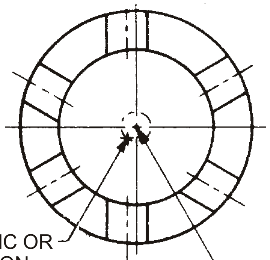

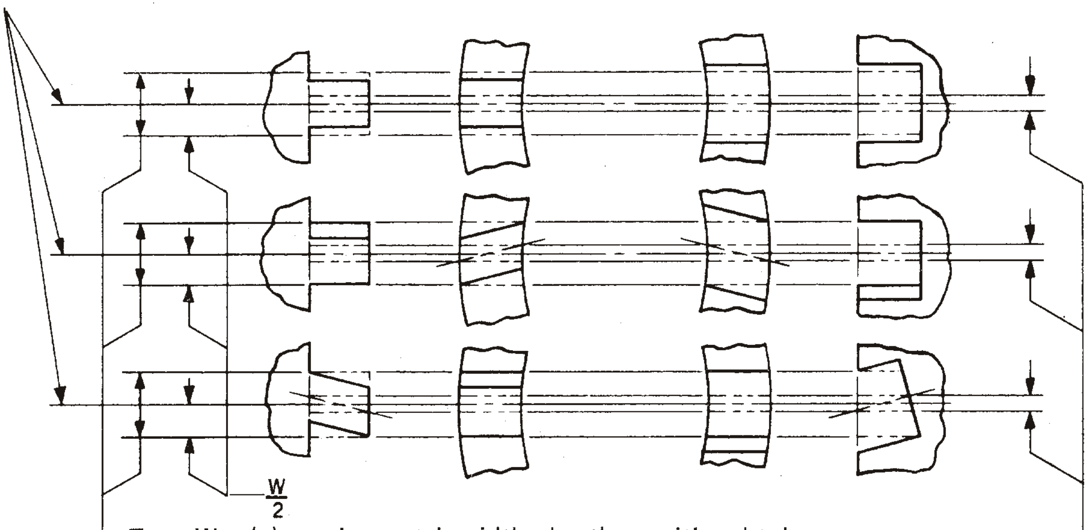

Zone W = (a) maximum tab width plus the positional tolerance,
e.g. .505 + .000 = .505 OR .502 + .003 = .505
(b) minimum slot width minus the positional tolerance,
e.g. .505 – .000 = .505 OR .508 – .003 = .505

Side surfaces of each tab or slot may deviate from true position or true direction, provided zone W is not violated and the tab or slot is within limits of size.

TABLE 2

INCH

SYMBOL		WIDTH OF TOLERANCE ZONE ALLOWED					
	TAB SIZE	.505	.504	.503	.502	.501	.500
.003 MAX	SLOT SIZE	.505	.506	.507	.508	.509	.510
⊕ .000Ⓜ | A | BⓂ		.000	.001	.002	.003	.004	.005
⊕ .000Ⓜ | .003 MAX | A | BⓂ		.000	.001	.002	.003	.003	.003
⊕ .003Ⓜ | A | BⓂ		NOT APPLICABLE			.003	.004	.005
⊕ .003 | A | B RFS understood		NOT APPLICABLE			.003	.003	.003

METRIC

SYMBOL		WIDTH OF TOLERANCE ZONE ALLOWED					
	TAB SIZE	12.83	12.80	12.78	12.75	12.73	12.70
	SLOT SIZE	12.83	12.85	12.88	12.90	12.93	12.95
⊕ 0Ⓜ | A | BⓂ		0	0.025	0.05	0.08	0.10	0.13
⊕ 0Ⓜ | 0.08 MAX | A | BⓂ		0	0.025	0.05	0.08	0.08	0.08
⊕ 0.08Ⓜ | A | BⓂ		NOT APPLICABLE			0.08	0.10	0.13
⊕ 0.08 | A | B RFS understood		NOT APPLICABLE			0.08	0.08	0.08

INTERPRETATION OF FIGURE 5-185
FIGURE 5-185a

5.16 Metric Conversion Act Effect. With the signing of H.R. 8674, the Metric Conversion Act of 1975, into Public Law 94-168 by President Ford on December 23, 1975, government contracts as well as international trade with other countries using the SI Metric system will continue to grow at an increasing rate. The following conversion tables are provided, as well as the appendix in the rear of this publication, to aid the changeover from one system to the other. The information will also assist in reading metric drawings for comparison with inch drawings now in use. See Section 12-5 for Metric Screw Threads. See SECTION 6 for Metric Sheet Sizes.

in./mm

DECIMAL EQUIVALENTS

Inches to Millimeters

Inch	mm	Inch	mm	Inch	mm
.001	0.025 4	.027	0.685 8	.062	1.574 8
.0015	0.038 1	.028	0.711 2	.063	1.600 2
.002	0.050 8	.029	0.736 6	.064	1.625 6
.0025	0.063 5	.030	0.762 0	.065	1.651 0
.003	0.076 2	.031	0.787 4	.066	1.676 4
.0035	0.088 9	.032	0.812 8	.067	1.701 8
.004	0.101 6	.033	0.838 2	.068	1.727 2
.0045	0.114 3	.034	0.863 6	.069	1.752 6
.005	0.127 0	.035	0.889 0	.070	1.778 0
.0055	0.139 7	.036	0.914 4	.071	1.803 4
.006	0.152 4	.037	0.939 8	.072	1.828 8
.0065	0.165 1	.038	0.965 2	.073	1.854 2
.007	0.177 8	.039	0.990 6	.074	1.879 6
.0075	0.190 5	.040	1.016 0	.075	1.905 0
.008	0.203 2	.041	1.041 4	.076	1.930 4
.0085	0.215 9	.042	1.066 8	.077	1.955 8
.009	0.228 6	.043	1.092 2	.078	1.981 2
.0095	0.241 3	.044	1.117 6	.079	2.006 6
.010	0.254 0	.045	1.143 0	.080	2.032 0
.011	0.279 4	.046	1.168 4	.081	2.057 4
.012	0.304 8	.047	1.193 8	.082	2.082 8
.013	0.330 2	.048	1.219 2	.083	2.108 2
.014	0.355 6	.049	1.244 6	.084	2.133 6
.015	0.381 0	.050	1.270 0	.085	2.159 0
.016	0.406 4	.051	1.295 4	.086	2.184 4
.017	0.431 8	.052	1.320 8	.087	2.209 8
.018	0.457 2	.053	1.346 2	.088	2.235 2
.019	0.482 6	.054	1.371 6	.089	2.260 6
.020	0.508 0	.055	1.397 0	.090	2.286 0
.021	0.533 4	.056	1.422 4	.091	2.311 4
.022	0.558 8	.057	1.447 8	.092	2.336 8
.023	0.584 2	.058	1.473 2	.093	2.362 2
.024	0.609 6	.059	1.498 6	.094	2.387 6
.025	0.635 0	.060	1.524 0	.095	2.413 0
.026	0.660 4	.061	1.549 4	.096	2.438 4

METRIC CONVERSION PLANNER

Inch	mm	Inch	mm	Inch	mm
.097	2.463 8	.132	3.352 8	.167	4.241 8
.098	2.489 2	.133	3.378 2	.168	4.267 2
.099	2.514 6	.134	3.403 6	.169	4.292 6
.100	2.540 0	.135	3.429 0	.170	4.318 0
.101	2.565 4	.136	3.454 4	.171	4.343 4
.102	2.590 8	.137	3.479 8	.172	4.368 8
.103	2.616 2	.138	3.505 2	.173	4.394 2
.104	2.641 6	.139	3.530 6	.174	4.419 6
.105	2.667 0	.140	3.556 0	.175	4.445 0
.106	2.692 4	.141	3.581 4	.176	4.470 4
.107	2.717 8	.142	3.606 8	.177	4.495 8
.108	2.743 2	.143	3.632 2	.178	4.521 2
.109	2.768 6	.144	3.657 6	.179	4.546 6
.110	2.794 0	.145	3.683 0	.180	4.572 0
.111	2.819 4	.146	3.708 4	.181	4.597 4
.112	2.844 8	.147	3.733 8	.182	4.622 8
.113	2.870 2	.148	3.759 2	.183	4.648 2
.114	2.895 6	.149	3.784 6	.184	4.673 6
.115	2.921 0	.150	3.810 0	.185	4.699 0
.116	2.946 4	.151	3.835 4	.186	4.724 4
.117	2.971 8	.152	3.860 8	.187	4.749 8
.118	2.997 2	.153	3.886 2	.188	4.775 2
.119	3.022 6	.154	3.911 6	.189	4.800 6
.120	3.048 0	.155	3.937 0	.190	4.826 0
.121	3.073 4	.156	3.962 4	.191	4.851 4
.122	3.098 8	.157	3.987 8	.192	4.876 8
.123	3.124 2	.158	4.013 2	.193	4.902 2
.124	3.149 6	.159	4.038 6	.194	4.927 6
.125	3.175 0	.160	4.064 0	.195	4.953 0
.126	3.200 4	.161	4.089 4	.196	4.978 4
.127	3.225 8	.162	4.114 8	.197	5.003 8
.128	3.251 2	.163	4.140 2	.198	5.029 2
.129	3.276 6	.164	4.165 6	.199	5.054 6
.130	3.302 0	.165	4.191 0	.200	5.080 0
.131	3.327 4	.166	4.216 4	.201	5.105 4

in./mm

METRIC CONVERSION PLANNER

Inch	mm	Inch	mm	Inch	mm
.202	5.130 8	.237	6.019 8	.272	6.908 8
.203	5.156 2	.238	6.045 2	.273	6.934 2
.204	5.181 6	.239	6.070 6	.274	6.959 6
.205	5.207 0	.240	6.096 0	.275	6.985 0
.206	5.232 4	.241	6.121 4	.276	7.010 4
.207	5.257 8	.242	6.146 8	.277	7.035 8
.208	5.283 2	.243	6.172 2	.278	7.061 2
.209	5.308 6	.244	6.197 6	.279	7.086 6
.210	5.334 0	.245	6.223 0	.280	7.112 0
.211	5.359 4	.246	6.248 4	.281	7.137 4
.212	5.384 8	.247	6.273 8	.282	7.162 8
.213	5.410 2	.248	6.299 2	.283	7.188 2
.214	5.435 6	.249	6.324 6	.284	7.213 6
.215	5.461 0	.250	6.350 0	.285	7.239 0
.216	5.486 4	.251	6.375 4	.286	7.264 4
.217	5.511 8	.252	6.400 8	.287	7.289 8
.218	5.537 2	.253	6.426 2	.288	7.315 2
.219	5.562 6	.254	6.451 6	.289	7.340 6
.220	5.588 0	.255	6.477 0	.290	7.366 0
.221	5.613 4	.256	6.502 4	.291	7.391 4
.222	5.638 8	.257	6.527 8	.292	7.416 8
.223	5.664 2	.258	6.553 2	.293	7.442 2
.224	5.689 6	.259	6.578 6	.294	7.467 6
.225	5.715 0	.260	6.604 0	.295	7.493 0
.226	5.740 4	.261	6.629 4	.296	7.518 4
.227	5.765 8	.262	6.654 8	.297	7.543 8
.228	5.791 2	.263	6.680 2	.298	7.569 2
.229	5.816 6	.264	6.705 6	.299	7.594 6
.230	5.842 0	.265	6.731 0	.300	7.620 0
.231	5.867 4	.266	6.756 4	.301	7.645 4
.232	5.892 8	.267	6.781 8	.302	7.670 8
.233	5.918 2	.268	6.807 2	.303	7.696 2
.234	5.943 6	.269	6.832 6	.304	7.721 6
.235	5.969 0	.270	6.858 0	.305	7.747 0
.236	5.994 4	.271	6.883 4	.306	7.772 4

in./mm

METRIC CONVERSION PLANNER

Inch	mm	Inch	mm	Inch	mm
.307	7.797 8	.342	8.686 8	.377	9.575 8
.308	7.823 2	.343	8.712 2	.378	9.601 2
.309	7.848 6	.344	8.737 6	.379	9.626 6
.310	7.874 0	.345	8.763 0	.380	9.652 0
.311	7.899 4	.346	8.788 4	.381	9.677 4
.312	7.924 8	.347	8.813 8	.382	9.702 8
.313	7.950 2	.348	8.839 2	.383	9.728 2
.314	7.975 6	.349	8.864 6	.384	9.753 6
.315	8.001 0	.350	8.890 0	.385	9.779 0
.316	8.026 4	.351	8.915 4	.386	9.804 4
.317	8.051 8	.352	8.940 8	.387	9.829 8
.318	8.077 2	.353	8.966 2	.388	9.855 2
.319	8.102 6	.354	8.991 6	.389	9.880 6
.320	8.128 0	.355	9.017 0	.390	9.906 0
.321	8.153 4	.356	9.042 4	.391	9.931 4
.322	8.178 8	.357	9.067 8	.392	9.956 8
.323	8.204 2	.358	9.093 2	.393	9.982 2
.324	8.229 6	.359	9.118 6	.394	10.007 6
.325	8.255 0	.360	9.144 0	.395	10.033 0
.326	8.280 4	.361	9.169 4	.396	10.058 4
.327	8.305 8	.362	9.194 8	.397	10.083 8
.328	8.331 2	.363	9.220 2	.398	10.109 2
.329	8.356 6	.364	9.245 6	.399	10.134 6
.330	8.382 0	.365	9.271 0	.400	10.160 0
.331	8.407 4	.366	9.296 4	.401	10.185 4
.332	8.432 8	.367	9.321 8	.402	10.210 8
.333	8.458 2	.368	9.347 2	.403	10.236 2
.334	8.483 6	.369	9.372 6	.404	10.261 6
.335	8.509 0	.370	9.398 0	.405	10.287 0
.336	8.534 4	.371	9.423 4	.406	10.312 4
.337	8.559 8	.372	9.448 8	.407	10.337 8
.338	8.585 2	.373	9.474 2	.408	10.363 2
.339	8.610 6	.374	9.499 6	.409	10.388 6
.340	8.636 0	.375	9.525 0	.410	10.414 0
.341	8.661 4	.376	9.550 4	.411	10.439 4

in./mm

METRIC CONVERSION PLANNER

Inch	mm	Inch	mm	Inch	mm
.412	10.464 8	.447	11.353 8	.482	12.242 8
.413	10.490 2	.448	11.379 2	.483	12.268 2
.414	10.515 6	.449	11.404 6	.484	12.293 6
.415	10.541 0	.450	11.430 0	.485	12.319 0
.416	10.566 4	.451	11.455 4	.486	12.344 4
.417	10.591 8	.452	11.480 8	.487	12.369 8
.418	10.617 2	.453	11.506 2	.488	12.395 2
.419	10.642 6	.454	11.531 6	.489	12.420 6
.420	10.668 0	.455	11.557 0	.490	12.446 0
.421	10.693 4	.456	11.582 4	.491	12.471 4
.422	10.718 8	.457	11.607 8	.492	12.496 8
.423	10.744 2	.458	11.633 2	.493	12.522 2
.424	10.769 6	.459	11.658 6	.494	12.547 6
.425	10.795 0	.460	11.684 0	.495	12.573 0
.426	10.820 4	.461	11.709 4	.496	12.598 4
.427	10.845 8	.462	11.734 8	.497	12.623 8
.428	10.871 2	.463	11.760 2	.498	12.649 2
.429	10.896 6	.464	11.785 6	.499	12.674 6
.430	10.922 0	.465	11.811 0	.500	12.700 0
.431	10.947 4	.466	11.836 4	.501	12.725 4
.432	10.972 8	.467	11.861 8	.502	12.750 8
.433	10.998 2	.468	11.887 2	.503	12.776 2
.434	11.023 6	.469	11.912 6	.504	12.801 6
.435	11.049 0	.470	11.938 0	.505	12.827 0
.436	11.074 4	.471	11.963 4	.506	12.852 4
.437	11.099 8	.472	11.988 8	.507	12.877 8
.438	11.125 2	.473	12.014 2	.508	12.903 2
.439	11.150 6	.474	12.039 6	.509	12.928 6
.440	11.176 0	.475	12.065 0	.510	12.954 0
.441	11.201 4	.476	12.090 4	.511	12.979 4
.442	11.226 8	.477	12.115 8	.512	13.004 8
.443	11.252 2	.478	12.141 2	.513	13.030 2
.444	11.277 6	.479	12.166 6	.514	13.055 6
.445	11.303 0	.480	12.192 0	.515	13.081 0
.446	11.328 4	.481	12.217 4	.516	13.106 4

in./mm

METRIC CONVERSION PLANNER

Inch	mm	Inch	mm	Inch	mm
.517	13.131 8	.552	14.020 8	.587	14.909 8
.518	13.157 2	.553	14.046 2	.588	14.935 2
.519	13.182 6	.554	14.071 6	.589	14.960 6
.520	13.208 0	.555	14.097 0	.590	14.986 0
.521	13.233 4	.556	14.122 4	.591	15.011 4
.522	13.258 8	.557	14.147 8	.592	15.036 8
.523	13.284 2	.558	14.173 2	.593	15.062 2
.524	13.309 6	.559	14.198 6	.594	15.087 6
.525	13.335 0	.560	14.224 0	.595	15.113 0
.526	13.360 4	.561	14.249 4	.596	15.138 4
.527	13.385 8	.562	14.274 8	.597	15.163 8
.528	13.411 2	.563	14.300 2	.598	15.189 2
.529	13.436 6	.564	14.325 6	.599	15.214 6
.530	13.462 0	.565	14.351 0	.600	15.240 0
.531	13.487 4	.566	14.376 4	.601	15.265 4
.532	13.512 8	.567	14.401 8	.602	15.290 8
.533	13.538 2	.568	14.427 2	.603	15.316 2
.534	13.563 6	.569	14.452 6	.604	15.341 6
.535	13.589 0	.570	14.478 0	.605	15.367 0
.536	13.614 4	.571	14.503 4	.606	15.392 4
.537	13.639 8	.572	14.528 8	.607	15.417 8
.538	13.665 2	.573	14.554 2	.608	15.443 2
.539	13.690 6	.574	14.579 6	.609	15.468 6
.540	13.716 0	.575	14.605 0	.610	15.494 0
.541	13.741 4	.576	14.630 4	.611	15.519 4
.542	13.766 8	.577	14.655 8	.612	15.544 8
.543	13.792 2	.578	14.681 2	.613	15.570 2
.544	13.817 6	.579	14.706 6	.614	15.595 6
.545	13.843 0	.580	14.732 0	.615	15.621 0
.546	13.868 4	.581	14.757 4	.616	15.646 4
.547	13.893 8	.582	14.782 8	.617	15.671 8
.548	13.919 2	.583	14.808 2	.618	15.697 2
.549	13.944 6	.584	14.833 6	.619	15.722 6
.550	13.970 0	.585	14.859 0	.620	15.748 0
.551	13.995 4	.586	14.884 4	.621	15.773 4

in./mm

METRIC CONVERSION PLANNER

Inch	mm	Inch	mm	Inch	mm
.622	15.798 8	.657	16.687 8	.692	17.576 8
.623	15.824 2	.658	16.713 2	.693	17.602 2
.624	15.849 6	.659	16.738 6	.694	17.627 6
.625	15.875 0	.660	16.764 0	.695	17.653 0
.626	15.900 4	.661	16.789 4	.696	17.678 4
.627	15.925 8	.662	16.814 8	.697	17.703 8
.628	15.951 2	.663	16.840 2	.698	17.729 2
.629	15.976 6	.664	16.865 6	.699	17.754 6
.630	16.002 0	.665	16.891 0	.700	17.780 0
.631	16.027 4	.666	16.916 4	.701	17.805 4
.632	16.052 8	.667	16.941 8	.702	17.830 8
.633	16.078 2	.668	16.967 2	.703	17.856 2
.634	16.103 6	.669	16.992 6	.704	17.881 6
.635	16.129 0	.670	17.018 0	.705	17.907 0
.636	16.154 4	.671	17.043 4	.706	17.932 4
.637	16.179 8	.672	17.068 8	.707	17.957 8
.638	16.205 2	.673	17.094 2	.708	17.983 2
.639	16.230 6	.674	17.119 6	.709	18.008 6
.640	16.256 0	.675	17.145 0	.710	18.034 0
.641	16.281 4	.676	17.170 4	.711	18.059 4
.642	16.306 8	.677	17.195 8	.712	18.084 8
.643	16.332 2	.678	17.221 2	.713	18.110 2
.644	16.357 6	.679	17.246 6	.714	18.135 6
.645	16.383 0	.680	17.272 0	.715	18.161 0
.646	16.408 4	.681	17.297 4	.716	18.186 4
.647	16.433 8	.682	17.322 8	.717	18.211 8
.648	16.459 2	.683	17.348 2	.718	18.237 2
.649	16.484 6	.684	17.373 6	.719	18.262 6
.650	16.510 0	.685	17.399 0	.720	18.288 0
.651	16.535 4	.686	17.424 4	.721	18.313 4
.652	16.560 8	.687	17.449 8	.722	18.338 8
.653	16.586 2	.688	17.475 2	.723	18.364 2
.654	16.611 6	.689	17.500 6	.724	18.389 6
.655	16.637 0	.690	17.526 0	.725	18.415 0
.656	16.662 4	.691	17.551 4	.726	18.440 4

in./mm

METRIC CONVERSION PLANNER

Inch	mm	Inch	mm	Inch	mm
.727	18.465 8	.762	19.354 8	.797	20.243 8
.728	18.491 2	.763	19.380 2	.798	20.269 2
.729	18.516 6	.764	19.405 6	.799	20.294 6
.730	18.542 0	.765	19.431 0	.800	20.320 0
.731	18.567 4	.766	19.456 4	.801	20.345 4
.732	18.592 8	.767	19.481 8	.802	20.370 8
.733	18.618 2	.768	19.507 2	.803	20.396 2
.734	18.643 6	.769	19.532 6	.804	20.421 6
.735	18.669 0	.770	19.558 0	.805	20.447 0
.736	18.694 4	.771	19.583 4	.806	20.472 4
.737	18.719 8	.772	19.608 8	.807	20.497 8
.738	18.745 2	.773	19.634 2	.808	20.523 2
.739	18.770 6	.774	19.659 6	.809	20.548 6
.740	18.796 0	.775	19.685 0	.810	20.574 0
.741	18.821 4	.776	19.710 4	.811	20.599 4
.742	18.846 8	.777	19.735 8	.812	20.624 8
.743	18.872 2	.778	19.761 2	.813	20.650 2
.744	18.897 6	.779	19.786 6	.814	20.675 6
.745	18.923 0	.780	19.812 0	.815	20.701 0
.746	18.948 4	.781	19.837 4	.816	20.726 4
.747	18.973 8	.782	19.862 8	.817	20.751 8
.748	18.999 2	.783	19.888 2	.818	20.777 2
.749	19.024 6	.784	19.913 6	.819	20.802 6
.750	19.050 0	.785	19.939 0	.820	20.828 0
.751	19.075 4	.786	19.964 4	.821	20.853 4
.752	19.100 8	.787	19.989 8	.822	20.878 8
.753	19.126 2	.788	20.015 2	.823	20.904 2
.754	19.151 6	.789	20.040 6	.824	20.929 6
.755	19.177 0	.790	20.066 0	.825	20.955 0
.756	19.202 4	.791	20.091 4	.826	20.980 4
.757	19.227 8	.792	20.116 8	.827	21.005 8
.758	19.253 2	.793	20.142 2	.828	21.031 2
.759	19.278 6	.794	20.167 6	.829	21.056 6
.760	19.304 0	.795	20.193 0	.830	21.082 0
.761	19.329 4	.796	20.218 4	.831	21.107 4

in./mm

METRIC CONVERSION PLANNER

Inch	mm	Inch	mm	Inch	mm
.832	21.132 8	.867	22.021 8	.902	22.910 8
.833	21.158 2	.868	22.047 2	.903	22.936 2
.834	21.183 6	.869	22.072 6	.904	22.961 6
.835	21.209 0	.870	22.098 0	.905	22.987 0
.836	21.234 4	.871	22.123 4	.906	23.012 4
.837	21.259 8	.872	22.148 8	.907	23.037 8
.838	21.285 2	.873	22.174 2	.908	23.063 2
.839	21.310 6	.874	22.199 6	.909	23.088 6
.840	21.336 0	.875	22.225 0	.910	23.114 0
.841	21.361 4	.876	22.250 4	.911	23.139 4
.842	21.386 8	.877	22.275 8	.912	23.164 8
.843	21.412 2	.878	22.301 2	.913	23.190 2
.844	21.437 6	.879	22.326 6	.914	23.215 6
.845	21.463 0	.880	22.352 0	.915	23.241 0
.846	21.488 4	.881	22.377 4	.916	23.266 4
.847	21.513 8	.882	22.402 8	.917	23.291 8
.848	21.539 2	.883	22.428 2	.918	23.317 2
.849	21.564 6	.884	22.453 6	.919	23.342 6
.850	21.590 0	.885	22.479 0	.920	23.368 0
.851	21.615 4	.886	22.504 4	.921	23.393 4
.852	21.640 8	.887	22.529 8	.922	23.418 8
.853	21.666 2	.888	22.555 2	.923	23.444 2
.854	21.691 6	.889	22.580 6	.924	23.469 6
.855	21.717 0	.890	22.606 0	.925	23.495 0
.856	21.742 4	.891	22.631 4	.926	23.520 4
.857	21.767 8	.892	22.656 8	.927	23.545 8
.858	21.793 2	.893	22.682 2	.928	23.571 2
.859	21.818 6	.894	22.707 6	.929	23.596 6
.860	21.844 0	.895	22.733 0	.930	23.622 0
.861	21.869 4	.896	22.758 4	.931	23.647 4
.862	21.894 8	.897	22.783 8	.932	23.672 8
.863	21.920 2	.898	22.809 2	.933	23.698 2
.864	21.945 6	.899	22.834 6	.934	23.723 6
.865	21.971 0	.900	22.860 0	.935	23.749 0
.866	21.996 4	.901	22.885 4	.936	23.774 4

in./mm

METRIC CONVERSION PLANNER

Inch	mm	Inch	mm	Inch	mm
.937	23.799 8	.972	24.688 8	8.0	203.200 0
.938	23.825 2	.973	24.714 2	9.0	228.600 0
.939	23.850 6	.974	24.739 6	10.0	254.000 0
.940	23.876 0	.975	24.765 0	11.0	279.400 0
.941	23.901 4	.976	24.790 4	12.0	304.800 0
.942	23.926 8	.977	24.815 8	13.0	330.200 0
.943	23.952 2	.978	24.841 2	14.0	355.600 0
.944	23.977 6	.979	24.866 6	15.0	381.000 0
.945	24.003 0	.980	24.892 0	16.0	406.400 0
.946	24.028 4	.981	24.917 4	17.0	431.800 0
.947	24.053 8	.982	24.942 8	18.0	457.200 0
.948	24.079 2	.983	24.968 2	19.0	482.600 0
.949	24.104 6	.984	24.993 6	20.0	508.000 0
.950	24.130 0	.985	25.019 0	21.0	533.400 0
.951	24.155 4	.986	25.044 4	22.0	558.800 0
.952	24.180 8	.987	25.069 8	23.0	584.200 0
.953	24.206 2	.988	25.095 2	24.0	609.600 0
.954	24.231 6	.989	25.120 6	25.0	635.000 0
.955	24.257 0	.990	25.146 0	26.0	660.400 0
.956	24.282 4	.991	25.171 4	27.0	685.800 0
.957	24.307 8	.992	25.196 8	28.0	711.200 0
.958	24.333 2	.993	25.222 2	29.0	736.600 0
.959	24.358 6	.994	25.247 6	30.0	762.000 0
.960	24.384 0	.995	25.273 0	31.0	787.400 0
.961	24.409 4	.996	25.298 4	32.0	812.800 0
.962	24.434 8	.997	25.323 8	33.0	838.200 0
.963	24.460 2	.998	25.349 2	34.0	863.600 0
.964	24.485 6	.999	25.374 6	35.0	889.000 0
.965	24.511 0	1.0	25.400 0	36.0	914.400
.966	24.536 4	2.0	50.800 0	48.0	1 219.200
.967	24.561 8	3.0	76.200 0	60.0	1 524.000
.968	24.587 2	4.0	101.600 0	72.0	1 828.800
.969	24.612 6	5.0	127.000 0	84.0	2 133.600
.970	24.638 0	6.0	152.400 0	96.0	2 438.400
.971	24.663 4	7.0	177.800 0	108.0	2 743.200
				120.0	3 048.000

METRIC CONVERSION PLANNER

mm/in.

METRIC CONVERSION PLANNER

mm	Inch	mm	Inch	mm	Inch
2.01	.079 13	2.34	.092 13	2.67	.105 12
2.02	.079 53	2.35	.092 52	2.68	.105 51
2.03	.079 92	2.36	.092 91	2.69	.105 91
2.04	.080 32	2.37	.093 31	2.70	.106 30
2.05	.080 71	2.38	.093 70	2.71	.106 69
2.06	.081 10	2.39	.094 09	2.72	.107 09
2.07	.081 50	2.40	.094 49	2.73	.107 48
2.08	.081 89	2.41	.094 88	2.74	.107 87
2.09	.082 28	2.42	.095 28	2.75	.108 27
2.10	.082 68	2.43	.095 67	2.76	.108 66
2.11	.083 07	2.44	.096 06	2.77	.109 06
2.12	.083 46	2.45	.096 46	2.78	.109 45
2.13	.083 86	2.46	.096 85	2.79	.109 84
2.14	.084 25	2.47	.097 24	2.80	.110 24
2.15	.084 65	2.48	.097 64	2.81	.110 63
2.16	.085 04	2.49	.098 03	2.82	.111 02
2.17	.085 43	2.50	.098 43	2.83	.111 42
2.18	.085 83	2.51	.098 82	2.84	.111 81
2.19	.086 22	2.52	.099 21	2.85	.112 20
2.20	.086 61	2.53	.099 61	2.86	.112 60
2.21	.087 01	2.54	.100 00	2.87	.112 99
2.22	.087 40	2.55	.100 39	2.88	.113 39
2.23	.087 80	2.56	.100 79	2.89	.113 78
2.24	.088 19	2.57	.101 18	2.90	.114 17
2.25	.088 58	2.58	.101 57	2.91	.114 57
2.26	.088 98	2.59	.101 97	2.92	.114 96
2.27	.089 37	2.60	.102 36	2.93	.115 35
2.28	.089 76	2.61	.102 76	2.94	.115 75
2.29	.090 16	2.62	.103 15	2.95	.116 14
2.30	.090 55	2.63	.103 54	2.96	.116 54
2.31	.090 94	2.64	.103 94	2.97	.116 93
2.32	.091 34	2.65	.104 33	2.98	.117 32
2.33	.091 73	2.66	.104 72	2.99	.117 72
				3.00	.118 11

mm/in.

METRIC CONVERSION PLANNER

mm	Inch	mm	Inch	mm	Inch
3.01	.118 50	3.34	.131 50	3.67	.144 49
3.02	.118 90	3.35	.131 89	3.68	.144 88
3.03	.119 29	3.36	.132 28	3.69	.145 28
3.04	.119 69	3.37	.132 68	3.70	.145 67
3.05	.120 08	3.38	.133 07	3.71	.146 06
3.06	.120 47	3.39	.133 46	3.72	.146 46
3.07	.120 87	3.40	.133 86	3.73	.146 85
3.08	.121 26	3.41	.134 25	3.74	.147 24
3.09	.121 65	3.42	.134 65	3.75	.147 64
3.10	.122 05	3.43	.135 04	3.76	.148 03
3.11	.122 44	3.44	.135 43	3.77	.148 43
3.12	.122 83	3.45	.135 83	3.78	.148 82
3.13	.123 23	3.46	.136 22	3.79	.149 21
3.14	.123 62	3.47	.136 61	3.80	.149 61
3.15	.124 02	3.48	.137 01	3.81	.150 00
3.16	.124 41	3.49	.137 40	3.82	.150 39
3.17	.124 80	3.50	.137 80	3.83	.150 79
3.18	.125 20	3.51	.138 19	3.84	.151 18
3.19	.125 59	3.52	.138 58	3.85	.151 57
3.20	.125 98	3.53	.138 98	3.86	.151 97
3.21	.126 38	3.54	.139 37	3.87	.152 36
3.22	.126 77	3.55	.139 76	3.88	.152 76
3.23	.127 17	3.56	.140 16	3.89	.153 15
3.24	.127 56	3.57	.140 55	3.90	.153 54
3.25	.127 95	3.58	.140 94	3.91	.153 94
3.26	.128 35	3.59	.141 34	3.92	.154 33
3.27	.128 74	3.60	.141 73	3.93	.154 72
3.28	.129 13	3.61	.142 13	3.94	.155 12
3.29	.129 53	3.62	.142 52	3.95	.155 51
3.30	.129 92	3.63	.142 91	3.96	.155 91
3.31	.130 31	3.64	.143 31	3.97	.156 30
3.32	.130 71	3.65	.143 70	3.98	.156 69
3.33	.131 10	3.66	.144 09	3.99	.157 09
				4.00	.157 48

mm/in.

METRIC CONVERSION PLANNER

mm	Inch	mm	Inch	mm	Inch
4.01	.157 87	4.34	.170 87	4.67	.183 86
4.02	.158 27	4.35	.171 26	4.68	.184 25
4.03	.158 66	4.36	.171 65	4.69	.184 65
4.04	.159 06	4.37	.172 05	4.70	.185 04
4.05	.159 45	4.38	.172 44	4.71	.185 43
4.06	.159 84	4.39	.172 83	4.72	.185 83
4.07	.160 24	4.40	.173 23	4.73	.186 22
4.08	.160 63	4.41	.173 62	4.74	.186 61
4.09	.161 02	4.42	.174 02	4.75	.187 01
4.10	.161 42	4.43	.174 41	4.76	.187 40
4.11	.161 81	4.44	.174 80	4.77	.187 80
4.12	.162 20	4.45	.175 20	4.78	.188 19
4.13	.162 60	4.46	.175 59	4.79	.188 58
4.14	.162 99	4.47	.175 98	4.80	.188 98
4.15	.163 39	4.48	.176 38	4.81	.189 37
4.16	.163 78	4.49	.176 77	4.82	.189 76
4.17	.164 17	4.50	.177 17	4.83	.190 16
4.18	.164 57	4.51	.177 56	4.84	.190 55
4.19	.164 96	4.52	.177 95	4.85	.190 95
4.20	.165 35	4.53	.178 35	4.86	.191 34
4.21	.165 75	4.54	.178 74	4.87	.191 73
4.22	.166 14	4.55	.179 13	4.88	.192 13
4.23	.166 54	4.56	.179 53	4.89	.192 52
4.24	.166 93	4.57	.179 92	4.90	.192 91
4.25	.167 32	4.58	.180 32	4.91	.193 31
4.26	.167 72	4.59	.180 71	4.92	.193 70
4.27	.168 11	4.60	.181 10	4.93	.194 09
4.28	.168 50	4.61	.181 50	4.94	.194 49
4.29	.168 90	4.62	.181 89	4.95	.194 88
4.30	.169 29	4.63	.182 28	4.96	.195 28
4.31	.169 69	4.64	.182 68	4.97	.195 67
4.32	.170 08	4.65	.183 07	4.98	.196 06
4.33	.170 47	4.66	.183 46	4.99	.196 46
				5.00	.196 85

METRIC CONVERSION PLANNER

mm/in.

mm	Inch	mm	Inch	mm	Inch
5.01	.197 24	5.34	.210 24	5.67	.223 23
5.02	.197 64	5.35	.210 63	5.68	.223 62
5.03	.198 03	5.36	.211 02	5.69	.224 02
5.04	.198 43	5.37	.211 42	5.70	.224 41
5.05	.198 82	5.38	.211 81	5.71	.224 80
5.06	.199 21	5.39	.212 20	5.72	.225 20
5.07	.199 61	5.40	.212 60	5.73	.225 59
5.08	.200 00	5.41	.212 99	5.74	.225 98
5.09	.200 39	5.42	.213 39	5.75	.226 38
5.10	.200 79	5.43	.213 78	5.76	.226 77
5.11	.201 18	5.44	.214 17	5.77	.227 17
5.12	.201 57	5.45	.214 57	5.78	.227 56
5.13	.201 97	5.46	.214 96	5.79	.227 95
5.14	.202 36	5.47	.215 35	5.80	.228 35
5.15	.202 76	5.48	.215 75	5.81	.228 74
5.16	.203 15	5.49	.216 14	5.82	.229 13
5.17	.203 54	5.50	.216 54	5.83	.229 53
5.18	.203 94	5.51	.216 93	5.84	.229 92
5.19	.204 33	5.52	.217 32	5.85	.230 32
5.20	.204 72	5.53	.217 72	5.86	.230 71
5.21	.205 12	5.54	.218 11	5.87	.231 10
5.22	.205 51	5.55	.218 50	5.88	.231 50
5.23	.205 91	5.56	.218 90	5.89	.231 89
5.24	.206 30	5.57	.219 29	5.90	.232 28
5.25	.206 69	5.58	.219 69	5.91	.232 68
5.26	.207 09	5.59	.220 08	5.92	.233 07
5.27	.207 48	5.60	.220 47	5.93	.233 46
5.28	.207 87	5.61	.220 87	5.94	.233 86
5.29	.208 27	5.62	.221 26	5.95	.234 25
5.30	.208 66	5.63	.221 65	5.96	.234 65
5.31	.209 06	5.64	.222 05	5.97	.235 04
5.32	.209 45	5.65	.222 44	5.98	.235 43
5.33	.209 84	5.66	.222 83	5.99	.235 83
				6.00	.236 22

mm/in.

METRIC CONVERSION PLANNER

mm	Inch	mm	Inch	mm	Inch
6.01	.236 61	6.34	.249 61	6.67	.262 60
6.02	.237 01	6.35	.250 00	6.68	.262 99
6.03	.237 40	6.36	.250 39	6.69	.263 39
6.04	.237 80	6.37	.250 79	6.70	.263 78
6.05	.238 19	6.38	.251 18	6.71	.264 17
6.06	.238 58	6.39	.251 57	6.72	.264 57
6.07	.238 98	6.40	.251 97	6.73	.264 96
6.08	.239 37	6.41	.252 36	6.74	.265 35
6.09	.239 76	6.42	.252 76	6.75	.265 75
6.10	.240 16	6.43	.253 15	6.76	.266 14
6.11	.240 55	6.44	.253 54	6.77	.266 54
6.12	.240 95	6.45	.253 94	6.78	.266 93
6.13	.241 34	6.46	.254 33	6.79	.267 32
6.14	.241 73	6.47	.254 72	6.80	.267 72
6.15	.242 13	6.48	.255 12	6.81	.268 11
6.16	.242 52	6.49	.255 51	6.82	.268 50
6.17	.242 91	6.50	.255 91	6.83	.268 90
6.18	.243 31	6.51	.256 30	6.84	.269 29
6.19	.243 70	6.52	.256 69	6.85	.269 69
6.20	.244 09	6.53	.257 09	6.86	.270 08
6.21	.244 49	6.54	.257 48	6.87	.270 47
6.22	.244 88	6.55	.257 87	6.88	.270 87
6.23	.245 28	6.56	.258 27	6.89	.271 26
6.24	.245 67	6.57	.258 66	6.90	.271 65
6.25	.246 06	6.58	.259 06	6.91	.272 05
6.26	.246 46	6.59	.259 45	6.92	.272 44
6.27	.246 85	6.60	.259 84	6.93	.272 83
6.28	.247 24	6.61	.260 24	6.94	.273 23
6.29	.247 64	6.62	.260 63	6.95	.273 62
6.30	.248 03	6.63	.261 02	6.96	.274 02
6.31	.248 43	6.64	.261 42	6.97	.274 41
6.32	.248 82	6.65	.261 81	6.98	.274 80
6.33	.249 21	6.66	.262 20	6.99	.275 20
				7.00	.275 59

mm/in.

METRIC CONVERSION PLANNER

mm	Inch	mm	Inch	mm	Inch
7.01	.275 98	7.34	.288 98	7.67	.301 97
7.02	.276 38	7.35	.289 37	7.68	.302 36
7.03	.276 77	7.36	.289 76	7.69	.302 76
7.04	.277 17	7.37	.290 16	7.70	.303 15
7.05	.277 56	7.38	.290 55	7.71	.303 54
7.06	.277 95	7.39	.290 95	7.72	.303 94
7.07	.278 35	7.40	.291 34	7.73	.304 33
7.08	.278 74	7.41	.291 73	7.74	.304 72
7.09	.279 13	7.42	.292 13	7.75	.305 12
7.10	.279 53	7.43	.292 52	7.76	.305 51
7.11	.279 92	7.44	.292 91	7.77	.305 91
7.12	.280 32	7.45	.293 31	7.78	.306 30
7.13	.280 71	7.46	.293 70	7.79	.306 69
7.14	.281 10	7.47	.294 09	7.80	.307 09
7.15	.281 50	7.48	.294 49	7.81	.307 48
7.16	.281 89	7.49	.294 88	7.82	.307 87
7.17	.282 28	7.50	.295 28	7.83	.308 27
7.18	.282 68	7.51	.295 67	7.84	.308 66
7.19	.283 07	7.52	.296 06	7.85	.309 06
7.20	.283 46	7.53	.296 46	7.86	.309 45
7.21	.283 86	7.54	.296 85	7.87	.309 84
7.22	.284 25	7.55	.297 24	7.88	.310 24
7.23	.284 65	7.56	.297 64	7.89	.310 63
7.24	.285 04	7.57	.298 03	7.90	.311 02
7.25	.285 43	7.58	.298 43	7.91	.311 42
7.26	.285 83	7.59	.298 82	7.92	.311 81
7.27	.286 22	7.60	.299 21	7.93	.312 20
7.28	.286 61	7.61	.299 61	7.94	.312 60
7.29	.287 01	7.62	.300 00	7.95	.312 99
7.30	.287 40	7.63	.300 39	7.96	.313 39
7.31	.287 80	7.64	.300 79	7.97	.313 78
7.32	.288 19	7.65	.301 18	7.98	.314 17
7.33	.288 58	7.66	.301 58	7.99	.314 57
				8.00	.314 96

mm/in.

METRIC CONVERSION PLANNER

mm	Inch	mm	Inch	mm	Inch
8.01	.315 35	8.34	.328 35	8.67	.341 34
8.02	.315 75	8.35	.328 74	8.68	.341 73
8.03	.316 14	8.36	.329 13	8.69	.342 13
8.04	.316 54	8.37	.329 53	8.70	.342 52
8.05	.316 93	8.38	.329 92	.871	.342 91
8.06	.317 32	8.39	.330 32	8.72	.343 31
8.07	.317 72	8.40	.330 71	8.73	.343 70
8.08	.318 11	8.41	.331 10	8.74	.344 09
8.09	.318 50	8.42	.331 50	8.75	.344 49
8.10	.318 90	8.43	.331 89	8.76	.344 88
8.11	.319 29	8.44	.332 28	8.77	.345 28
8.12	.319 69	8.45	.332 68	8.78	.345 67
8.13	.320 08	8.46	.333 07	8.79	.346 06
8.14	.320 47	8.47	.333 46	8.80	.346 46
8.15	.320 87	8.48	.333 86	8.81	.346 85
8.16	.321 26	8.49	.334 25	8.82	.347 24
8.17	.321 65	8.50	.334 65	8.83	.347 64
8.18	.322 05	8.51	.335 04	8.84	.348 03
8.19	.322 44	8.52	.335 43	8.85	.348 43
8.20	.322 83	8.53	.335 83	8.86	.348 82
8.21	.323 23	8.54	.336 22	8.87	.349 21
8.22	.323 62	8.55	.336 61	8.88	.349 61
8.23	.324 02	8.56	.337 01	8.89	.350 00
8.24	.324 41	8.57	.337 40	8.90	.350 39
8.25	.324 80	8.58	.337 80	8.91	.350 79
8.26	.325 20	8.59	.338 19	8.92	.351 18
8.27	.325 59	8.60	.338 58	8.93	.351 58
8.28	.325 98	8.61	.338 98	8.94	.351 97
8.29	.326 38	8.62	.339 37	8.95	.352 36
8.30	.326 77	8.63	.339 76	8.96	.352 76
8.31	.327 17	8.64	.340 16	8.97	.353 15
8.32	.327 56	8.65	.340 55	8.98	.353 54
8.33	.327 95	8.66	.340 95	8.99	.353 94
				9.00	.354 33

mm/in.

METRIC CONVERSION PLANNER

mm	Inch	mm	Inch	mm	Inch
9.01	.354 72	9.34	.367 72	9.67	.380 71
9.02	.355 12	9.35	.368 11	9.68	.381 10
9.03	.355 51	9.36	.368 50	9.69	.381 50
9.04	.355 91	9.37	.368 90	9.70	.381 89
9.05	.356 30	9.38	.369 29	9.71	.382 28
9.06	.356 69	9.39	.369 69	9.72	.382 68
9.07	.357 09	9.40	.370 08	9.73	.383 07
9.08	.357 48	9.41	.370 47	9.74	.383 46
9.09	.357 87	9.42	.370 87	9.75	.383 86
9.10	.358 27	9.43	.371 26	9.76	.384 25
9.11	.358 66	9.44	.371 65	9.77	.384 65
9.12	.359 06	9.45	.372 05	9.78	.385 04
9.13	.359 45	9.46	.372 44	9.79	.385 43
9.14	.359 84	9.47	.372 83	9.80	.385 83
9.15	.360 24	9.48	.373 23	9.81	.386 22
9.16	.360 63	9.49	.373 62	9.82	.386 61
9.17	.361 02	9.50	.374 02	9.83	.387 01
9.18	.361 42	9.51	.374 41	9.84	.387 40
9.19	.361 81	.952	.374 80	9.85	.387 80
9.20	.362 20	9.53	.375 20	9.86	.388 19
9.21	.362 60	9.54	.375 59	9.87	.388 58
9.22	.362 99	9.55	.375 98	9.88	.388 98
9.23	.363 39	9.56	.376 38	9.89	.389 37
9.24	.363 78	9.57	.376 77	9.90	.389 76
9.25	.364 17	9.58	.377 17	9.91	.390 16
9.26	.364 57	9.59	.377 56	9.92	.390 55
9.27	.364 96	9.60	.377 95	9.93	.390 95
9.28	.365 35	9.61	.378 35	9.94	.391 34
9.29	.365 75	9.62	.378 74	9.95	.391 73
9.30	.366 14	9.63	.379 13	9.96	.392 13
9.31	.366 54	9.64	.379 53	9.97	.392 52
9.32	.366 93	9.65	.379 92	9.98	.392 91
9.33	.367 32	9.66	.380 32	9.99	.393 31
				10.00	.393 70

mm/in.

METRIC CONVERSION PLANNER

mm	Inch	mm	Inch	mm	Inch
11	.433 07	44	1.732 28	77	3.031 50
12	.472 44	45	1.771 65	78	3.070 87
13	.511 81	46	1.811 02	79	3.110 24
14	.551 18	47	1.850 39	80	3.149 61
15	.590 55	48	1.889 76	81	3.188 98
16	.629 92	49	1.929 13	82	3.228 35
17	.669 29	50	1.968 50	83	3.267 72
18	.708 66	51	2.007 87	84	3.307 09
19	.748 03	52	2.047 24	85	3.346 46
20	.787 40	53	2.086 61	86	3.385 83
21	.826 77	54	2.125 98	87	3.425 20
22	.866 14	55	2.165 35	88	3.464 57
23	.905 51	56	2.204 72	89	3.503 94
24	.944 88	57	2.244 09	90	3.543 31
25	.984 25	58	2.283 46	91	3.582 68
26	1.023 62	59	2.322 83	92	3.622 05
27	1.062 99	60	2.362 20	93	3.661 42
28	1.102 36	61	2.401 57	94	3.700 79
29	1.141 73	62	2.440 94	95	3.740 16
30	1.181 10	63	2.480 31	96	3.779 53
31	1.220 47	64	2.519 69	97	3.818 90
32	1.259 84	65	2.559 06	98	3.858 27
33	1.299 21	66	2.598 43	99	3.897 64
34	1.338 58	67	2.637 80	100	3.937 01
35	1.377 95	68	2.677 17	200	7.874 0
36	1.417 32	69	2.716 54	300	11.811 0
37	1.456 69	70	2.755 91	400	15.748 0
38	1.496 06	71	2.795 28	500	19.685 1
39	1.535 43	72	2.834 65	600	23.622 1
40	1.574 80	73	2.874 02	700	27.559 1
41	1.614 17	74	2.913 39	800	31.496 1
42	1.653 54	75	2.952 76	900	35.433 1
43	1.692 91	76	2.992 13	1000	39.370 1 =1 meter

THE SI SYSTEM OF METRIC CONVERSIONS

approximate

ENGLISH TO METRIC

inches (ins.) X **25.4** = millimeters (mm)
feet (ft.) X **0.3** = meters (m)
yards (yds.) X **0.9** = meters (m)
miles (mi.) X **1.6** = kilometers (km)
sq. inch (in^2) X **6.5** = sq. cetermeters (cm^2)
sq. feet (ft^2) X **0.09** = sq. meters (m^2)
sq. yard (yd^2) X **0.8** = sq. meters (m^2)
acre (a) X **0.4** = hectares (ha)
cu. in. (in^3) X **16.0** = cu. centimeters (cm^3)
cu. ft. (ft^3) X **0.03** = cu. meters (m^3)
cu. yd. (yd^3) X **0.8** = cu. meter (m^3)
(liq) quart (qt) X **0.9** = liter (L)
gallon (gal) X **0.004** = cu. meters (m^3)
(avdp) ounce (oz) X **28.3** = grams (g)
(avdp) pound (lb) X **0.45** = kilogram (kg)
horsepower (h.p.) X **0.75** = kilowatt (kW)
ft. per sec. (ft/s) X **0.304** = met. per sec. (m/s)
ounce-force (ozf) X **0.278** = newtons (N)
pounds-force (lbf) X **4.448** = newtons (N)
foot-pounds (ft. lb) X **1.355** = newton-meters (N.m)
foot-pounds (ft. lb) X **1.355** = joules (J)
in.-pounds (in. lb.) X **0.112** = newton-meters (N.m)
lb. per foot (lb/ft) X **14.593** = new. per meter (N/m)
cycles per sec. (cps) X **1.0** = hertz (Hz)

Brit. Therm Unit (Btu) X **1 055.06** = joules (J)

Degrees Fah. (°F) X **5/9 after sub. 32** = deg. Celsius (°C)

METRIC TO ENGLISH

mm X **0.04** = ins.
m X **3.3** = ft.
m X **1.1** = yds.
km X **0.6** = mi.
cm^2 X **0.16** = in^2
m^2 X **11.00** = ft^2
m^2 X **1.2** = yd^2
ha X **2.5** = a
cm^3 X **0.06** = in^3
m^3 X **35.0** = ft^3
m^3 X **1.3** = yd^3
L X **1.05** = qt
m^3 X **264.2** = gal
g X **0.035** = oz
kg X **2.20** = lb
kw X **1.34** = h.p.
m/s X **3.280** = ft/s
N X **3.597** = ozf
N X **0.224** = lbf
N·m X **0.737** = ft. lb.
J X **0.737** = ft. lb.
N·m X **8.850** = in. lb
N·m X **0.068** = lb/ft
Hz X **1.0** = cps

J X **0.000 94** = Btu

°C X **9/5 then add 32** = °F

5.10 SCOPE.

5.10.1 Dimensioning And Tolerancing Matrix.

5.10.2 Purpose. This appendix is intended to provide guidance concerning interpretation of dimensioning and tolerancing practices by association of drawing contents to the issue of the standard applied.

5.20 GENERAL REQUIREMENTS.

5.20.1 Drawing Interpretation. The evolution of dimensioning and tolerancing practices often complicates the process of drawing interpretation where the standard applied (MIL-STD-8 versus ANSI Y14.5) or the applicable standard revision level is not evident. TABLE 5A-1 is provided to facilitate identification of dimensioning and tolerancing practice in the process of drawing interpretation.

Geometric and Positional Tolerancing Matrix

FEATURE CONTROL FRAME AND SYMBOLS FOR GEOMETRIC DIMENSIOMING & TOLERANCING

CHARACTERISTIC	MIL-STD-8A INDEPENDENT	MIL-STD-8B		MIL-STD-8C		USASI Y14.5-1966	
		RFS	MMC	RFS	MMC	RFS	MMC
CONCENTRICITY (coaxiality)	◉ A .XXX TIR	◉ A .XXX TIR	◉ AⓂ .XXX TIRⓂ	◉ A .XXX TIR	◉ AⓂ .XXX TIRⓂ	↗ A .XXX ◎ A .XXX DIA	⌖ A .XXX DIA
PERPENDICULARITY (squareness)	⊥ A .XXX	⊥ A .XXX	⊥ AⓂ .XXX Ⓜ	⊥ A .XXX	⊥ AⓂ .XXX Ⓜ	⊥ A .XXX	⊥ AⓂ .XXX Ⓜ
PARALLELISM	∥ A .XXX	∥ A .XXX	// AⓂ .XXX Ⓜ	∥ A .XXX	∥ AⓂ .XXX Ⓜ	∥ A .XXX	∥ AⓂ .XXX Ⓜ
SYMMETRY	—	⌯ A .XXX	⌯ AⓂ .XXX Ⓜ	⌯ A .XXX	⌯ AⓂ .XXX Ⓜ	⌯ A .XXX TOTAL ⌖ AⓈ .XXX TOTALⓈ	⌖ A .XXX TOTAL
ANGULARITY	∠ A .XXX	∠ A .XXX	∠ AⓂ .XXX Ⓜ	∠ A .XXX	∠ AⓂ .XXX Ⓜ	∠ A .XXX	∠ AⓂ .XXX Ⓜ
INTERRELATED CHARACTERISTICS (diameter & surface at right angle to common axis)	—	◉ A ⊥ D .XXX TIR	◉ AⓂ ⊥ D .XXX TIRⓂ	◉ A ⊥ D .XXX TIR	◉ AⓂ ⊥ D .XXX TIRⓂ	↗ A D .XXX	⌖ A D .XXX DIA
		(Datum MMC) (Datum RFS) ◉ AⓂ ⊥ .XXX TIR (Tol.RFS)		Datum MMC) (Datum RFS) ◉ AⓂ ⊥ .XXX TIR (Tol.RFS)		(Datum MMC) ⌖ AⓂ D .XXX (Tol.RFS)	
FLATNESS	∽ .XXX	⌒ .XXX	—	— .XXX	—	▱ .XXX	—
STRAIGHTNESS	⌒ .XXX	⌒ .XXX	⌒ .XXXⓂ	— .XXX	— .XXXⓂ	— .XXX	—
POSITION (holes)	⌖ .XXX DIA	⌖ AⓈ .XXX DIAⓈ	⌖ A .XXX DIA	⌖ AⓈ .XXX DIAⓈ	⌖ A .XXX DIA	⌖ AⓈ .XXX DIAⓈ	⌖ A .XXX DIA
POSITION (slots)	—	⌖ AⓈ .XXX TOTALⓈ	⌖ A .XXX TOTAL	⌖ AⓈ .XXX TOTALⓈ	⌖ A .XXX TOTAL	⌖ AⓈ .XXX TOTALⓈ	⌖ A .XXX TOTAL
CIRCULARITY (roundness) (radial)	—	—	—	○ .XXX ON R	—	○ .XXX	—
CIRCULARITY (roundness) (diameter)	—	○ .XXX note1	—	○ .XXX note1	—	—	—
PROJECTED TOL. ZONE	—	—	—	⌖ .XXX DIAⓈ TOL ZONE PROJECTED.XXX	⌖ A .XXX DIA TOL ZONE PROJECTED.XXX	⌖ .XXX DIAⓈ TOL ZONE PROJECTED.XXX	⌖ .XXX DIA TOL ZONE PROJECTED.XXX
PROFILE OF A LINE	—	—	—	—	—	⌒ .XXX	—
PROFILE OF A SURFACE	—	—	—	—	used note	⌓ .XXX	—
COMPOSITE PROFILE	—	—	—	—	—	—	—
CIRCULAR RUNOUT	—	—	—	—	—	↗ A B .XXX CIRCULAR	—
TOTAL RUNOUT	—	—	—	—	—	↗ A B .XXX	—
RUNOUT (two datum diameters with common axis)	—	—	—	—	—	↗ A-B .XXX	—
CYLINDRICITY	—	—	—	—	—	⌭ .XXX	—
COMPOSITE POSITION	—	—	—	—	—	—	—
TWO SINGLE SEGMENT POSITION				—	—	—	—

ASME Y14.5M-1994 SYMBOLS

SYM	TERM	SYM	TERM	SYM	TERM
Ⓜ	At Maximum Matl. Condition	⟨ST⟩	Statistical Tolerance	R	Radius
Ⓢ	Regardless of Feature Size (understood)	A ▲	Datum Feature	CR	Controlled Radius
Ⓛ	At Least Matl. Condition	3.10	Dimension Not to Scale	SR	Spherical Radius
Ⓟ	Projected Tolerance Zone	(.19)	Reference Dimension	Ø	Diameter
Ⓣ	Tangent Plane	⊥	Perpendicularity	SØ	Spherical Diameter
Ⓕ	Free State	//	Parallelism	⌵	Countersink
○	Circularity	∠	Angularity	⌴	Counterbore or Spotface
⌭	Cylindricity	↗	Circular Runout	↧	Depth / Deep
—	Straightness	⌰	Total Runout	.500	Basic Dimension
▱	Flatness	⌖	Position	⌒2.00	Arc Length
⌒	Profile of a Line	⌯	Symmetry	◄–►	Between
⌓	Profile of a Surface	⌲	Conical Taper	⌱	Dimension Origin
◎	Concentricity	⌳	Slope	⌀↗	All Around
8X	Number of Places	□	Square Shape	Ø.12 A1	Datum Target
				×	Datum Target Point

NOTES:

1. PURPOSE OF THIS TABLE:
   - A. TO DETERMINE WHICH DIMENSIONING AND TOLERANCING STANDARD APPLIES BASED ON THE SYMBOL SHOWN ON COMPONENT DRAWINGS.
   - B. TO PROVIDE FOR INTERPRETATION OF GEOMETRIC REQUIREMENTS IN ACCORDANCE WITH ASME Y14.5M-1994 REGARDLESS OF WHICH STANDARD (IF ANY) IS SPECIFIED ON COMPONENT DRAWINGS.

2. USE OF THIS TABLE:
BY COMPARING DRAWING REQUIREMENTS ◉ AⓂ .XXX TIRⓂ WITH THE TABLE AND LOCATING THE COMPARABLE GEOMETRIC TOLERANCE SYMBOL ◉ AⓂ .XXX TIRⓂ FOR CONCENTRICITY. THE APPLICABLE STANDARD FOR INTERPRETATION WOULD BE MIL-STD-8B. IF MIL-STD-8B IS NOT AVAILABLE, THE REQUIREMENT CAN BE INTERPRETED USING A LATER STANDARD.

(Continued on next page)

ANSI Y14.5-1973		ANSI Y14.5M-1982		ASME Y14.5M-1994		CHARACTERISTIC
RFS	MMC	RFS	MMC	RFS note 5	MMC	
↗ A .XXX ◎ A ØXXX	⌖ A Ⓜ ØXXX Ⓜ	⌰ .XXX A ◎ Ø.XXX A	⌖ Ø.XXX Ⓜ A Ⓜ	⌰ .XXX A ◎ Ø.XXX A	⌖ Ø.XXX Ⓜ A Ⓜ	CONCENTRICITY (coaxiality)
⊥ A .XXX	⊥ A Ⓜ .XXX Ⓜ	⊥ .XXX A	⊥ .XXX Ⓜ A Ⓜ	⊥ .XXX A	⊥ .XXX Ⓜ A Ⓜ	PERPENDICULARITY (squareness)
// A .XXX	// A Ⓜ .XXX Ⓜ	// .XXX A	// .XXX Ⓜ A Ⓜ	// .XXX A	// .XXX Ⓜ A Ⓜ	PARALLELISM
// A .XXX ⌖ A Ⓢ .XXX Ⓢ	⌖ A Ⓜ .XXX Ⓜ	⌖ .XXX Ⓢ A Ⓢ	⌖ .XXX Ⓜ A Ⓜ	⌯ .XXX A	⌖ .XXX Ⓜ A Ⓜ	SYMMETRY
∠ A .XXX	∠ A Ⓜ .XXX Ⓜ	∠ .XXX A	∠ .XXX Ⓜ A Ⓜ	∠ .XXX A	∠ .XXX Ⓜ A Ⓜ	ANGULARITY
↗ A B .XXX TOTAL	⌖ A Ⓜ B ØXXX Ⓜ	⌰ .XXX A B	⌖ Ø.XXX Ⓜ A Ⓜ B	⌰ .XXX A B	⌖ Ø.XXX Ⓜ A Ⓜ B	INTERRELATED CHARACTERISTICS (diameter & surface at right angle to common axis)
(Datum MMC) ⌖ A Ⓜ B .XXX (Tol.RFS)		(Datum MMC) ⌖ .XXX A Ⓜ B (Tol.RFS)		(Datum MMC) ⌖ .XXX A Ⓜ B (Tol.RFS)		
⏥ .XXX	—	⏥ .XXX ⏥ .XXX .010/.25 X .25	—	⏥ .XXX ⏥ .XXX .010/.25 X .25	—	FLATNESS
— .XXX — Ø.XXX	— Ø.XXX Ⓜ	— .XXX — Ø.XXX — Ø.XXX Ø.010/.XXX	— Ø.XXX Ⓜ	— .XXX — Ø.XXX — Ø.XXX Ø.010/.XXX	— Ø.XXX Ⓜ	STRAIGHTNESS
⌖ A Ⓢ ØXXX Ⓢ	⌖ A Ⓜ ØXXX Ⓜ	⌖ Ø.XXX Ⓢ A Ⓢ	⌖ Ø.XXX Ⓜ A Ⓜ	⌖ Ø.XXX A	⌖ Ø.XXX Ⓜ A Ⓜ	POSITION (holes)
⌖ A Ⓢ .XXX Ⓢ	⌖ A Ⓜ .XXX Ⓜ	⌖ .XXX Ⓢ A Ⓢ	⌖ .XXX Ⓜ A Ⓜ	⌖ .XXX A	⌖ .XXX Ⓜ A Ⓜ	POSITION (slots)
○ .XXX	—	○ .XXX	—	○ .XXX	—	CIRCULARITY (roundness) (radial)
—	—	—	—	—	—	CIRCULARITY (roundness) (diameter)
⌖ A ØXXX Ⓢ .XXX Ⓟ	⌖ A ØXXX Ⓜ .XXX Ⓟ	⌖ Ø.XXX Ⓢ A .XXX Ⓟ	⌖ Ø.XXX Ⓜ A .XXX Ⓟ	⌖ Ø.XXX Ⓟ .XXX A	⌖ Ø.XXX Ⓜ Ⓟ .XXX A	PROJECTED TOL. ZONE
⌒ A .XXX	—	⌒ .XXX A	—	⌒ .XXX A	—	PROFILE OF A LINE
⌓ A .XXX	—	⌓ .XXX A	—	⌓ .XXX A	—	PROFILE OF A SURFACE
—	—	—	—	⌓ .XXX A B C .XXX A B	—	COMPOSITE PROFILE
↗ A .XXX	—	↗ .XXX A	—	↗ .XXX A	—	CIRCULAR RUNOUT
↗ A .XXX TOTAL	—	⌰ .XXX A	—	⌰ .XXX A	—	TOTAL RUNOUT
⌰ A-B .XXX	—	⌰ .XXX A-B	—	⌰ .XXX A-B	—	RUNOUT (two datum diameters with common axis)
⌭ .XXX	—	⌭ .XXX	—	⌭ .XXX	—	CYLINDRICITY
⌖ A B C ØXXX Ⓢ A ØXXX Ⓢ	⌖ A B C ØXXX Ⓜ A ØXXX Ⓜ	⌖ Ø.XXX Ⓢ A B C Ø.XXX Ⓢ A	⌖ Ø.XXX Ⓜ A B C Ø.XXX Ⓜ A	⌖ Ø .XXX A B C Ø .XXX A B	⌖ Ø.XXX Ⓜ A B C Ø.XXX Ⓜ A B	COMPOSITE POSITION
—	—	—	—	⌖ Ø .XXX A B C ⌖ Ø .XXX A B	⌖ Ø.XXX Ⓜ A B C ⌖ Ø.XXX Ⓜ A B	TWO SINGLE SEGMENT POSITION

3. THE TOLERANCE GOVERNING THE CIRCULARITY OF A FEATURE IS THE DIFFERENCE IN THE DIAMETER OF TWO CONCENTRIC CIRCLES (IN PLANES NORMAL TO THE AXIS) BETWEEN WHICH THE SURFACE SO TOLERANCED MUST LIE.

4. INTERPRETATION WHEN NO TOLERANCE OF FORM IS SPECIFIED:

   A. THE ENVELOPE OF PERFECT FORM AT MAXIMUM (MMC) AND LEAST (LMC) MATERIAL CONDITIONS APPLIES BOTH TO THE FEATURE AND THE INTERRELATIONSHIP OF FEATURES (PERFECT FORM FOR THE COMPLETE PART AT MMC).

   B. THE SPECIFIED LIMITS INDICATES THE ENTIRE SURFACE MUST BE WITHIN LIMITS. NOT MERELY A POINT ON THE SURFACE. THE MAX MATERIAL LIMITS DEFINE A MAX PERMISSIBLE PROFILE FOR THE FEATURE AND THE MIN LIMITS DEFINE A MIN LIMIT OF SIZE.

   C. DEPARTURE IS ALLOWED WHEN THE FEATURE(S) DEPART FROM MMC WHERE THE ACTUAL SIZE OF EACH FEATURE HAS DEPARTED FROM MMC. A TOLERANCE OF POSITION AND FORM COMBINED IS ALLOWED EQUAL TO THE AMOUNT OF SUCH DEPARTURE. THE TOTAL PERMISSIBLE VARIATION IN POSITION AND FORM IS MAXIMUM WHEN THE FEATURE IS AT LMC CONTAINED WITHIN THE MMC BOUNDARY OF PERFECT FORM.

5. WHEN NO MODIFYING SYMBOL IS SPECIFIED REGARDLESS OF FEATURE SIZE (RFS) IS IMPLIED AND THE SYMBOL Ⓢ IS NO LONGER NECESSARY.

(Continued from preceding page)